WOODWORKING TECHNIQUES of a VISUALLY HANDICAPPED CRAFTSMAN

PREPARED UNDER THE SPONSORSHIP OF
THE VOCATIONAL REHABILITATION ADMINISTRATION
AND
STATE UNIVERSITY COLLEGE, OSWEGO, NEW YORK

HV1711
W6
H556

M.C. MIGEL LIBRARY
AMERICAN PRINTING HOUSE FOR THE BLIND

HV1711
W6
H556
c.5.

WOODWORKING TECHNIQUES of a VISUALLY HANDICAPPED CRAFTSMAN

AMERICAN FOUNDATION FOR THE BLIND
15 WEST 16th STREET
NEW YORK, N.Y. 10011

This monograph was prepared by Robert T. Hillebrand, graduate fellow, at State University Oswego and was supported in part by The Vocational Rehabilitation Administration Department of Health Education and Welfare, Washington, D.C. Grant No. 240-T-66.

JAMES R. HASTINGS
Project Director

January, 1965

Photograph Courtesy of
MARY R. FINCH

In a home basement shop in Ventnor, New Jersey, a blind woodworking craftsman finds a haven for achieving his lifelong interest. Here is an account of this man and his wood products and construction techniques. It is a pleasure to introduce Nicholas Lalli.

PREFACE

Beginning with just raw materials, man can construct aesthetic and functional artifacts. This is the role of a skilled craftsman, who uses his knowledge and ability to materialize the creative process. It is this process and the finished products that are of prime importance to others, and it is for this reason that the following text has been written and published. The discussion of the woodworking techniques and wood products manufactured by Mr. Lalli not only adds to the understanding of these two factors, but gives recognition to his personal craftsmanship and professional ability and ingenuity.

The intentions for presenting the work and products of a blind craftsman are directly related to those who would find value in such a description. It is hoped that this text may provide encouragement and motivation for persons wishing to undertake woodworking, especially the blind, who often feel that this type of activity is beyond their capabilities. Here is proof that it can be done, and done well. Along with the motivational aspect, woodworking ideas and methods may be adopted by a visually handicapped person willing to find the means of beginning a new experience.

Beyond the beginning students, this bulletin offers an abundance of information for those visually handicapped craftsmen who wish to increase their knowledge and develop further in this field. The many unique construction techniques of Mr. Lalli's can give new or different means of manufacturing articles, plus, the large variety of his products can provide others with project ideas. This type of growth experience need not be limited to blind craftsmen; the sighted can equally benefit.

Finally, instructors who teach blind students are often faced with a shortage of instructional material for use in conjunction with the education process. This bulletin is by no means a woodworking textbook, but the construction techniques employed by Mr. Lalli are worthy of use by other persons teaching the processes of woodworking. If these techniques or operations are used, teaching and learning may be made simpler and more satisfying for all concerned.

To achieve these four objectives, the material in this bulletin has been divided into chapters categorizing the information. The first chapter deals with background information relating to the life of Mr. Lalli and his association with the field of woodworking. Following this, his construction techniques and products are discussed. To provide an interesting and non-repetitive text, Chapter II was divided into two separate parts. The first explains six products, each with a full description of the construction procedure, and the second covers his other articles. Since tools are an integral part of woodworking, Chapter III describes many of the devices, tools, and equipment employed by him. In the last chapter, an account is given of Mr. Lalli's experiences in teaching other visually handicapped persons.

While writing the text, the author made an assumption that needs to be stated at this point. No attempt has been made to describe the basic hand or machine woodworking operations within these pages, for it was assumed that the reader would possess a certain amount of fundamental knowledge regarding woodworking techniques and related tools and equipment. References are listed

in the Appendix to help those persons who are interested in this material, but have had only limited experience.

Appreciation and acknowledgment must be made of the Vocational Rehabilitation Administration grant which provided the funds for making this project possible. Special thanks is expressed to Dr. James R. Hastings, Project Director, for his assistance in initiating and developing the project. Without his guidance and direction, the realization of this bulletin would not have succeeded. Gratitude is also offered to my wife for her helpful suggestions and literary criticism. Thanks are also due Mrs. Mary LaFave for the careful typing of the manuscript and other stenographic assistance. Although the author was responsible for taking the photographs and drawing the diagrams and working drawings, Wayne R. Lennebacker needs to be thanked for his excellent processing of the photographic material. Finally, to all others who have helped in any way, the author wishes to give his sincere thanks.

ROBERT L. HILLEBRAND

CONTENTS

Chapter		Page
	Preface	iii
	Illustrations	viii
I	A NEW START IN LIFE	1
IIA	WORK OF THE PAST TEN YEARS	3
	PART A	
	Hanging Shelves	5
	Lazy-Susan	10
	Crucifix	16
	Early American Table	20
	Gavel and Block	28
	Drop-Leaf Table	33
IIB	WORK OF THE PAST TEN YEARS	39
	PART B	
	Cellaret	39
	Cookie Dish	42
	Candle Holder	44
	Candy Bowl and Lid	45
	Cigarette Container	46
	Bread Dish	48
	Cradle Planter	49
	Duplication Jobs	50
	Fruit Bowl	51
	Goblet	52
	Hutch	53
	Mallet	54
	Offering Plate	55
	Stereo Cabinet	56
	Candy Plate	57
	Flag Poles	58
III	TOOLS AND EQUIPMENT	60
	Special Construction Devices	63
	Power Equipment	68
	Tool and Equipment Maintenance	69
IV	TEACHING OTHERS	70
	APPENDIX	72
	A- 1 Gluing Stock	72
	A- 2 Squaring Stock	72
	A- 3 Cutting Curves on the Band Saw	75
	A- 4 Cutting Circles on the Band Saw	76
	A- 5 Screw Center Face Plate Lathe Turning	77
	A- 6 Four Screw Face Plate Lathe Turning	78
	A- 7 Between Centers Lathe Turning	79
	A- 8 Lacquer Finishing	79
	A- 9 Varnish Finishing	80
	A-10 Shellac Finishing	80
	B References	81

ILLUSTRATIONS

Figure		Page
2A- 1	Hanging Shelves	5
2A- 2	Positioning Stock for Making a Butt Joint	7
2A- 3	Drilling Dowl Joint Holes	8
2A- 4	Lazy-Susan	10
2A- 6	Scalloping a Dish Edge	12
2A- 7	Drilling a Center Hole on a Headstock Lathe	12
2A- 8	Drilling a Center Hole on a Bed Lathe	13
2A- 5	Positioning a Lazy-Susan Ball-Bearing	11
2A- 9	Assemblying Lazy-Susan	14
2A-10	Crucifix	16
2A-11	Cutting a Circle in Half on the Band Saw	17
2A-12	Early American Table	20
2A-13	Marking Stock Lengths on a Bed Lathe	22
2A-14	Measuring Stock Diameters with a Caliper	22
2A-15	Milling a Flat Surface on the Drill Press	23
2A-16	Locating Hole Centers Using a Drill Jig Guide	24
2A-17	Drilling Dowl Joint Holes with a Leg Vise	24
2A-18	Edge and Center Fluting	25
2A-19	Gavel and Block	28
2A-20	Drilling Stock with a V Block and Positioning Guide	30
2A-21	Drop-Leaf Table	33
2A-22	Laying Out a Semi-Circle	34
2A-23	Tapering a Leg on a Jointer	36
2B- 1	Cellaret	39
2B- 2	Cookie Dish	42
2B- 3	Using a Fly Cutter on a Bed Lathe	42
2B- 4	Split Chuck Lathe Turning	43
2B- 5	Candle Holder	44
2B- 6	Candy Bowl and Lid	45
2B- 7	Cigarette Container	46
2B- 8	Inside Chuck Lathe Turning	46
2B- 9	Bread Dish	48
2B-10	Cradle Planter	49
2B-11	Duplication Jobs	50
2B-12	Fruit Bowl	51
2B-13	Goblet	52
2B-14	Hutch	53
2B-15	Mallet	54
2B-16	Offering Plate	55
2B-17	Stereo Cabinet	56
2B-18	Candy Plate	57
2B-19	Flag Poles	58
2B-20	Supporting Stock While Lathe Turning	59
2B-21	Removing the Waste Stock from a Lathe Turning	59
3- 1	Centering Disc Set	60
3- 2	Lathe Cutting Tools	61
3- 3	Sanding Sticks	68

A- 1 Setting Jointer Fence to the Correct Angle 72
A- 2 Crosscutting Stock on the Circular Saw 73
A- 3 Measuring Stock Lengths 74
A- 4 Ripping Stock on the Circular Saw 74
A- 5 Cutting Small Curves on the Drill Press 75
A- 6 Cutting Curves on the Band Saw 75
A- 7 Locating the Stock Center 76
A- 8 Cutting a Circle on the Band Saw 77
A- 9 Turning Stock on a Bed Lathe 78
A- 10 Positioning a Four Screw Face Plate to the Stock 78

DIAGRAM

I Using a Center Line Scriber 5
II Lathe Turning Using a Duplicator 29
III Determining the Length of the Drop-Leaf Table Leg Frame 35
IV Sliding Track for the Cellaret 41
V Lathe Duplicator 62
VI Circle Cutter 64
VII Drill Jig Guide 65
VIII Scalloping Device 67

WORKING DRAWING

A Hanging Shelves 9
B Lazy-Susan 15
C Crucifix 19
D Early American Table 27
E Gavel and Block 32
F Drop-Leaf Table 38

CHAPTER I

A NEW START IN LIFE

Blindness, resulting from a detached retina, occurred quite suddenly and unexpectedly in May of 1954 for Mr. Lalli. Following an initial period of mental readjustment, a full year was spent listening to recorded books and learning Braille. No meaningful answers were being found in these activities, and life was slowly becoming disheartening for a man who had reaped a good life for the previous sixty years.

The needed challenge that regenerated this man came from an unexpected telephone call. A woman, unaware of Mr. Lalli's blindness, stated that she had seen his woodworking craftsmanship and desired his talents to construct cellaret. The design, construction, and price were discussed, to the mutual satisfaction of both parties. Mr. Lalli recounted the closing of the conversation. "I said to the lady that I was blind, and did she still want me to do the job? She said, yes; she was so shocked she didn't know what to say!" The cellaret stimulated the fact that blindness did not have to separate him from his beloved work. Returning to his workshop for the first time since blindness, the cellaret was constructed after a great deal of time, all with no assistance except for the stained finish. The motivation and inspiration were once again alive, and there was no stopping from then on.

The adjustment to blindness demanded an alteration in the work procedure occurring in the shop. But the familiarity and knowledge of the work area before blindness provided the process with invaluable links. Mr. Lalli decided that the shop needed to be converted to fit his new needs, which resulted in the elimination of all "dead wood' or material and equipment that were no longer needed. The basement shop became the haven for meeting the needs of a blind craftsman.

To gain strength and re-orientation to the tools and procedures that were so much a part of his life before blindness, Mr. Lalli began to spend his time constructing small articles, slowly progressing into larger and more difficult items. Miniature turnings on the lathe, including bowls and other decorative articles, were the first in this process. The receiving of one hundred dollars worth of lumber from the New Jersey State Commission for the Blind was a major help in the development of lathe skills. Although the majority of products made since blindness occurred had been constructed similarly before blindness, lathe items were entirely new to Mr. Lalli. He enjoyed the work experiences on the lathe, for it afforded an opportunity to turn a large variety of articles and to gain self-confidence needed by all blind workers.

In the years since 1955, the number and variety of articles produced have grown immensely, each differing in design and construction procedure. By 1959, Mr. Lalli decided that he did not have enough income from these products, and this belief fostered the development of new skills, new techniques, and new construction devices. In order for the blind to compete with a sighted craftsman, some type of lathe duplicating device was needed that would provide the ability to exactly reproduce an original turning. Applying his natural mechanical resources, Mr. Lalli developed such a lathe duplicator. This opened the way for mass production articles to be added to his variety of professional products.

What is the background of this man who has such a highly developed skill in woodworking? Coming to the Philadelphia area from Central Italy about the age of nine, Mr. Lalli soon learned the English language by reading extensively from the classics. Formal schooling was halted for Mr. Lalli at the age of thirteen as a result of having to help with the family income. At this time Mr. Lalli obtained the first in a series of employment positions in the furniture trade. Schooling was started anew a few years later by taking evening courses in English, mathematics and history, until the age of twenty-two. Following this, correspondence courses from the International Correspondence School in mechanical and architectural drawing were completed, all of which helped strengthen his ability to understand and illustrate furniture design. During this period, Mr. Lalli was gainfully employed in positions that included cabinet finisher, duplicator of antique furniture, and furniture serviceman, repairing the products sold by furniture stores. It was this latter position that afforded the chance to enter the homes of many customers, permitting him to see and obtain a greater knowledge of furniture design and construction.

Mr. Lalli always had a workshop where he could take his profession into his home. Working with wood in his basement provided a degree of independence and leisure-time activity. Besides being able to obtain a small profit from the sale of home-made articles, Mr. Lalli felt pleased that he could give a part of himself to others. This same attitude provides much of the motivation for this craftsman to continue to produce articles made of wood.

CHAPTER II

WORK OF THE PAST TEN YEARS

PART A

In the past ten years, a great variety of wood products have been constructed by Mr. Lalli. These articles incorporate construction techniques and procedures that are worthy of detailed explanations and illustrations. However, the abundance of these items and their similarity to each other will prevent a full analysis of each. For practical purposes, Part A of this chapter will be concerned only with those articles that employ the greatest variation in methods of construction, while still depicting the craftsmanship and skill required of the builder. Those articles not covered in detail are described in Part B, with a short description and illustration.

The question is often raised, for whom does Mr. Lalli construct these products? The purchaser of the articles varies with the construction method, or more specifically, with the product itself. In the field of custom-produced items, the general public is the largest consumer of the goods. These purchases are made either from direct orders for a particular item, or from an inventory of articles that are advertised. This advertisement is in the form of a circular distributed by previous customers and other individuals who have had some contact with his work. Another outlet for the products is through manufacturing companies and local community organizations. These articles are usually mass produced. Besides making the flag poles for a boat building company, Mr. Lalli has produced a variety of articles used as gifts and souvenirs by the local Lions' Club and other service organizations.

The products constructed in Mr. Lalli's basement are not selected by chance. Every article has a particular reason for being part of the large number of manufactured items. Mr. Lalli's knowledge of many of the products before blindness has automatically led to their present usage. For other products, the personal challenge of their construction has motivated him to undertake the task of building difficult things. By no means need these products motivate other blind craftsmen, since every individual has his own interests. The construction techniques, however, are important for the blind because these can be duplicated when making other items.

However, the most important reason for the selected articles to be made lies in the construction techniques required to complete such projects. Many of the techniques and procedures used would be followed and employed by any person building such items, whether or not the individual is sighted or blind. For years before his blindness, Mr. Lalli developed his craftsmanship in constructing wood products; he has simply continued to use these same techniques in like manner and method. Beyond this carry-over, construction techniques begin to adapt themselves to the limitations imposed by his blindness.

There are many techniques Mr. Lalli uses that are common and advantageous for all blind craftsmen. But more often than not, special hand, machine, and jig and fixture techniques have been developed by this craftsman himself. Interestingly, these personally developed techniques are often accompanied by a special device that aids and makes possible certain procedures. It is the hope that

many of these special techniques and accompanying devices will simplify the construction operation and make it possible for a blind person to carry out tasks difficult even for a sighted individual.

Mr. Lalli's ability to plan and design wood products stems from his background of work experiences before he became blind. As a serviceman of furniture, the knowledge and understanding of design and its aesthetic value created an ability that now aids in the construction of attractive articles. The formation of a mental library of furniture design before blindness has been aided by the fact that he created a sketch book of many objects he liked or which he felt illustrated certain features worth duplicating. All products constructed by Mr. Lalli since his blindness are developed from a mental picture of the planned object which utilizes a vivid imagination. Mr. Lalli feels that for any blind person to be creative, he needs this imagination.

To put the library in use today, Mr. Lalli plans objects in overall sizes and works towards the development of an item that is characterized by its beauty of shape and proportion. Little concern is given to exact dimensions in the planning stage. It becomes the responsibility of Mr. Lalli's hands and fingers to determine exact shapes, curves, or patterns. This primarily occurs during the actual construction of the product, while it is being cut or shaped, such as a wood turning on a lathe. Mr. Lalli developed a skill of knowing what an object looked like by the sense of touch, for as he stated, "the hands become the eyes of the blind."

Although a majority of the articles being made today were seen by Mr. Lalli before he became blind, the re-designing of such items or the complete construction of a new product results in the use of his designing and planning ability. This ability is not something that can be learned from a textbook, for it calls for a study of furniture and like articles. This results in a skill that can only be reflected in the tangible articles produced. Mr. Lalli and the many products constructed in his basement shop illustrate this tangible evidence.

To conclude this introduction to the wood products manufactured in the past ten years by Mr. Lalli, a few helpful suggestions are offered for the benefit of others. Since certain basic woodworking techniques are employed in the majority of the construction procedures, a description of these has been included in the Appendix. It is recommended that they be referred to as often as needed, to help clarify the main written text. *A thorough study and understanding of the working drawing provided for each of the six articles in Part A should be made before each construction procedure is read.* The large variety and complexity of the special construction devices used by Mr. Lalli does not permit a detailed description of them in this chapter. Chapter III is devoted to this task.

HANGING SHELVES

This moveable set of shelves can be used as a wall shelf for both small books or decorative items. Custom produced, the design pictured can be varied to match different decors by changing the scalloped pattern of the two end pieces. This product is made of Philippine Mahogany.

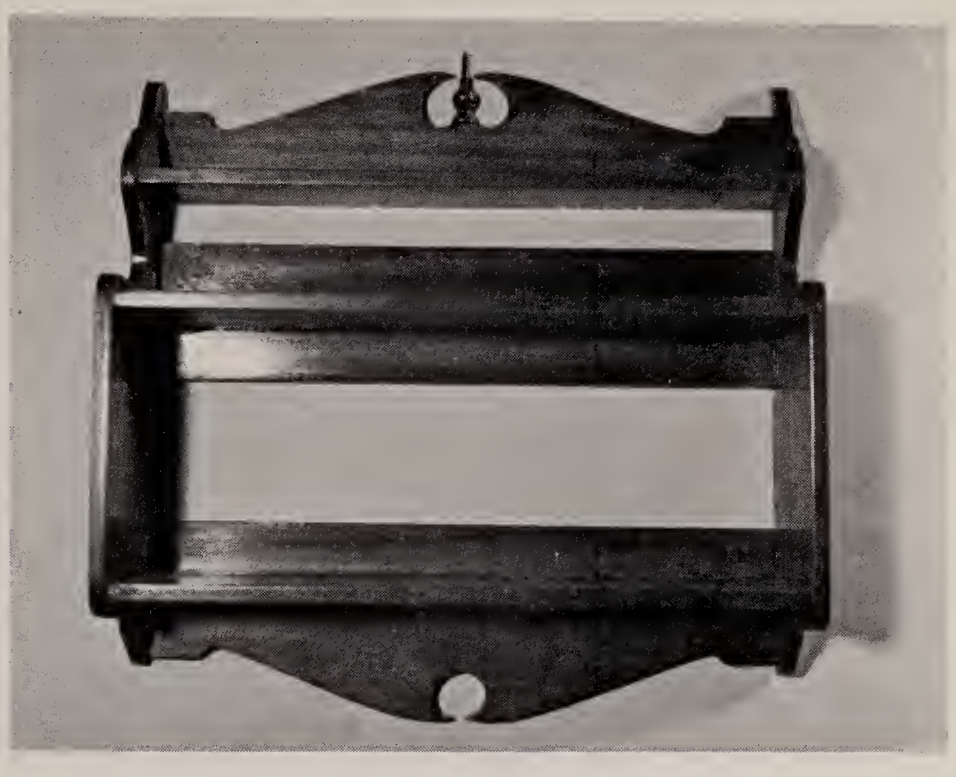

Figure 2A - 1. Hanging Shelves

CONSTRUCTION PROCEDURE

Shelves

1. Select the stock and square it to the correct size according to operations outlined in Appendix A-2. These operations are repeated for each of the three different shelves.

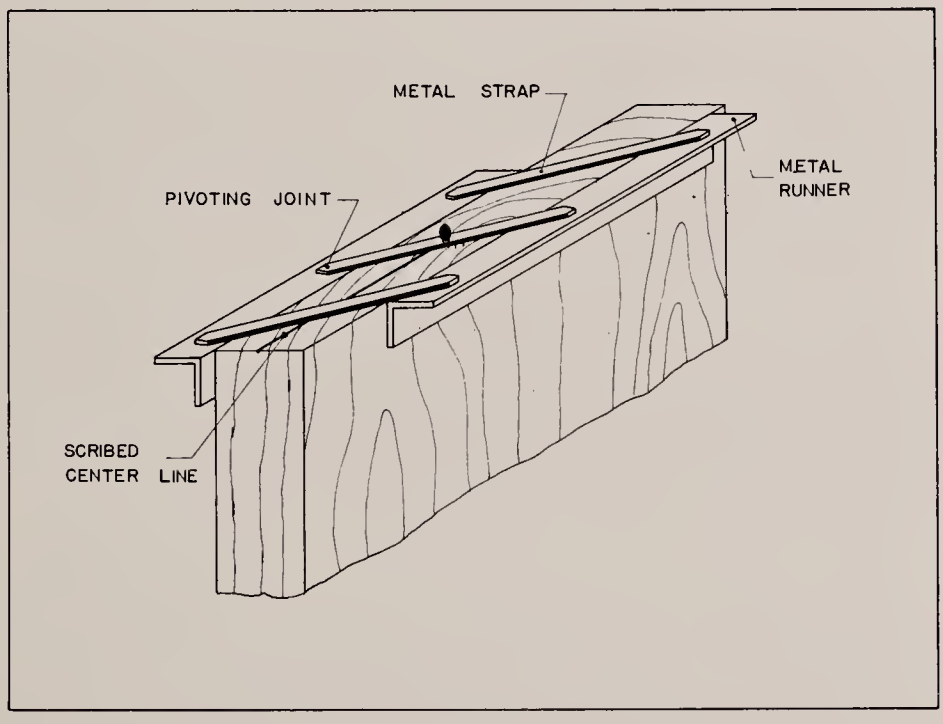

DIAGRAM I

2. Scribe a center line in both ends of all three shelves using a special centering scriber. (See Diagram I.) This line provides a guide for aligning

the shelves and shelf backs to the side pieces during the assembly procedure.

3. Hand sand all the shelves using three grades of sandpaper. These grades in sequence are 60, 80, and 120.

Shelf Backs — Top and Bottom Shelf Backs

1. After selecting the stock, joint one edge of the wood and square both ends making it the correct length. The jointed edge of the stock will be used as the shelf back edge that is opposite the curved pattern.
2. Cut the curved pattern for each shelf back following the procedure found in Appendix A-3.
3. Using the centering scriber, mark a center line on both ends of each shelf back as was done before for the shelves.
4. Sand this stock in the same manner that was employed for the shelves.

Shelf Backs — Middle Shelf Back

1. This piece of stock is simply squared to the correct size.
2. On the side of the shelf back that faces the wall to which the shelves are hung, cut a groove in the middle of the stock for its complete length. See working Drawing A for an illustration of this cut, which supports the hanging shelves in conjunction with two wood screws fastened to the wall. This groove can be cut on the circular saw with the blade tilted.
3. Completely sand the middle shelf back using the proper three grades of sandpaper.

Sides

1. Select the proper stock and smooth one edge on the jointer. This edge will be the back edge of the side pieces and opposite the curved pattern.
2. Cut the desired curved pattern for the sides using a template and the procedure outlined in Appendix A-3.
3. Scribe a short center line on the inside face of each side piece of stock at the three locations of the shelves. Use a try square, awl, and ruler to complete this operation.
4. Hand sand the side pieces of the hanging shelves.

Finial

1. This part of the hanging shelves is made on the lathe using the screw center face plate technique. (See Appendix A-5.) Once the finial is shaped and sanded, it is cut in half on the band saw. After this operation, the newly cut back is sanded on the belt sander.

Assembly — Shelves to Shelf Backs

1. A scrap block of wood to be used as a layout guide must first be cut. Its

size is determined by the off-set between the shelves and shelf backs. (See Figure 2A-2.)

Figure 2A - 2. Positioning Stock for Making a Butt Joint. After positioning and clamping one end of the joint, slide the off-set guide block along the shelf-back edge, making sure that the shelf is perfectly parallel.

2. With the proper gluing equipment available, proceed to fasten the shelves to shelf backs making a simple glued joint. The combination of these two pieces is only a preliminary step in making a dowl joint between the shelves and shelf backs and the side pieces.

3. Apply glue to the back edge of the shelves and follow the gluing operations described in Appendix A-1. Clamp the shelves and shelf backs together after the scrap block has been used to indicate the proper offset. See Figure 2A-2 for an illustration of this operation. Check the joint with a try square to be sure a 90° angle has been made.

Assembly — Shelves and Shelf Backs to Sides

1. Tack a drill jig to the end of the previously assembled shelves and shelf backs. Align the jig by matching the center line of the jig to the scribed center line on the end of the shelf backs. This drill jig will locate the holes to be drilled for making the dowl joint between the shelves and shelf backs and sides.

2. Using the proper size forstner bit in the drill press, drill the dowl holes to the correct depth. (See Figure 2A-3.) This procedure is best completed by first placing the drill in the hole of the drill jig and then squaring the stock on the table top.

3. Transfer the drill jig for the opposite end of the shelves and shelf backs and drill these holes to the proper depth. Repeat the preceding operations for each set of shelves and shelf backs.

Figure 2A - 3. Drilling Dowl Joint Holes. Be sure that the wood stock rests flush against the drill press table, to insure a properly aligned hole.

4. Using the same drill jig, tack it to the inside face of the side pieces. Align the jig by matching its center line to the three previously scribed center lines on each side piece. Drill these holes approximately 3/4 the distance through the stock. Repeat this procedure for each shelf position and for each side piece.
5. On the band saw, cut the proper number of dowls to correct length from 1/4″ dowl stock. Place the dowls with a small amount of glue in the holes of the side pieces. Use a dowl presser or dow pointer if necessary.
6. Using the procedure found in Appendix A-1, apply glue to the ends of the shelves and shelf backs and fasten them to the side pieces. Following the complete assembly, clamp the joints and remove any excess glue.
7. Tack and glue the finial to the top of the shelf back.

Finish

1. The varnish finishing procedure for this product is outlined in Appendix A-9.

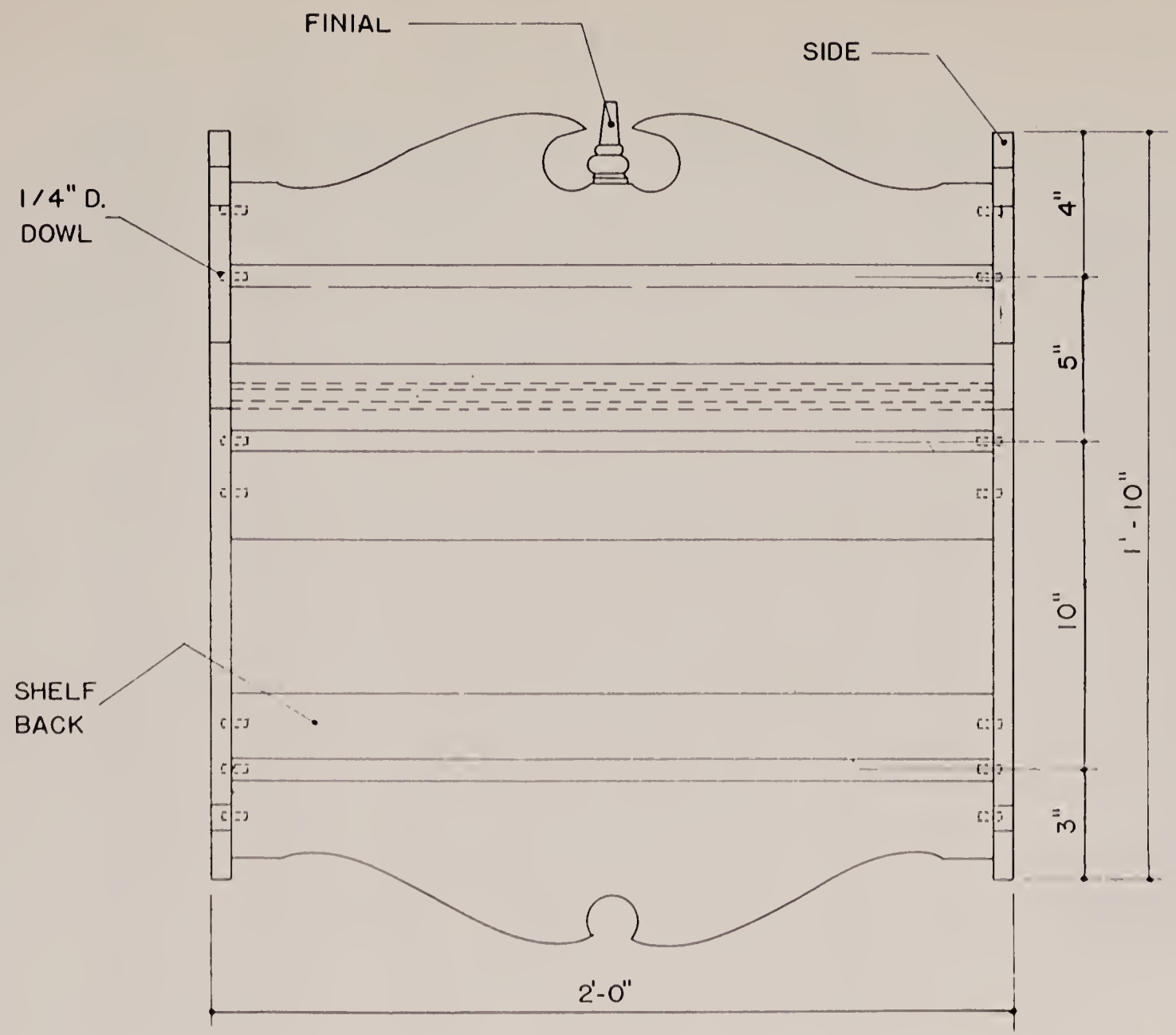

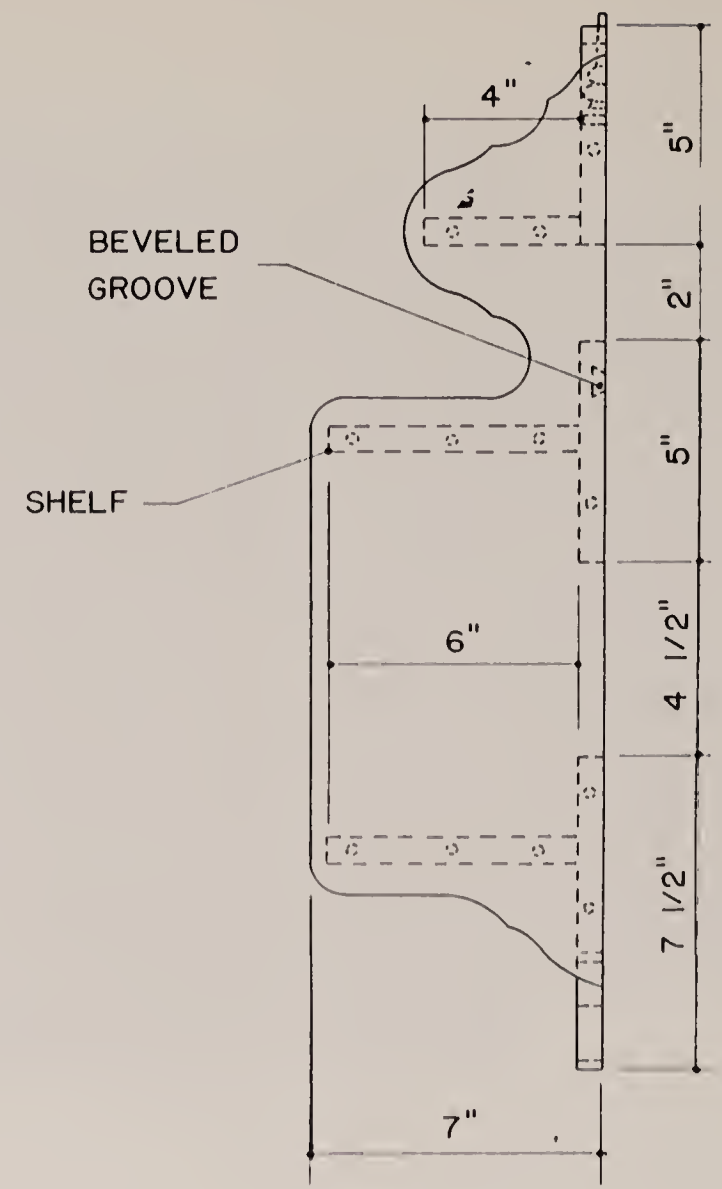

ALL STOCK – 5/8" THICK

LAZY - SUSAN

Many attractive designs can be created for a lazy-susan by simply varying the size and number of dishes or the sculptured dish edges. Usually made of African Mahogany, the most popular style has two dishes, both with a scalloped edge. The individual parts for the lazy-susan are custom produced and are constructed primarily on the lathe.

Figure 2A - 4. Lazy-Susan.

CONSTRUCTION PROCEDURE

Base

1. The base for the lazy-susan is turned on the lathe using the screw center face plate technique. (See Appendix A-5.) After the stock has been squared, cut into a circle, and mounted on a screw center face plate, the bottom, edge, and top can be shaped and sanded.
2. It is necessary to drill a hole (approximately 1″ diameter) through the base in order that the rotating ball-bearing can be properly fastened to the first dish during the assembly procedure. Use a special locating device to temporarily position the ball-bearing on the top of the base. (See Figure 2A-5.) Punch a hole into the wood surface through one of the four holes located on the top flange of the bearing.
3. Drill the hole with a twist drill on the drill press using the punched hole as a centering mark. See Figure 2A-5 for an illustration of the completed operation.

First Dish

1. Since the first dish has a relatively large diameter, it might not be possible to select a piece of stock with an adequate width. In this case, several pieces need to be glued together to form the needed dimension. Follow the operation outlined in Appendix A-1.
2. With a sufficiently sized piece of stock, the procedure described in Appendix A-6 is used for preparing the wood for a four screw face

Figure 2A - 5. Positioning a Lazy-Susan Ball-Bearing. Place the ball-bearing locator into the ball-bearing before positioning it to the base. Keep the bottom flange tangent to the "off-set" hole.

plate lathe turning. After truing the edge of the dish, the bottom and top is shaped. Use a fine, followed by a large, round nose cutting tool to cut the stock. Do not smooth or sand the dish at this point, for these operations are completed after the edge is scalloped.

3. It is necessary to remove the face plate from the bottom side of the dish. In the same holes used for mounting the face plate and with the same screws, fasten the scalloping matrix. To aid this process, a center pin on the matrix can be aligned with the previously punched center hole on the bottom of the dish.
4. The scalloping device must be mounted on the drill press table, and a high speed router bit needs to be placed in the drill chuck. With the guide pin of the matrix set into the adjustable pivot hole, position the scalloping device so that the outer edge of the stock rests against the cutting blade while the stylus touches the matrix. Be sure that the stylus is resting against the matrix at its widest diameter. With the scalloping device in the proper position, it should be clamped securely to prevent possible movement during the cutting procedure.
5. It is not advisable to shape the entire scalloped pattern with one heavy cut. After a light trial cut to check the scalloping device location, the router blade can be positioned so it cuts approximately 1/3 the stock thickness. (See Figure 2A-6.)
   After one complete revolution, the bit is lowered another 1/3, and this is repeated until the complete edge is formed.
6. After the scalloping process is completed, it is necessary to smooth and contour the edge of the dish on the lathe. Remove the matrix and remount the face plate. Remember to locate the special work on the face plate next to the previously punched alignment hole, in order that it is positioned *exactly* the same as it was during the initial shaping. (See Appendix A-6.)

Figure 2A - 6. Scalloping a Dish Edge. To prevent splintering, always rotate the wood stock in the opposite direction to the rotation of the cutting bit.

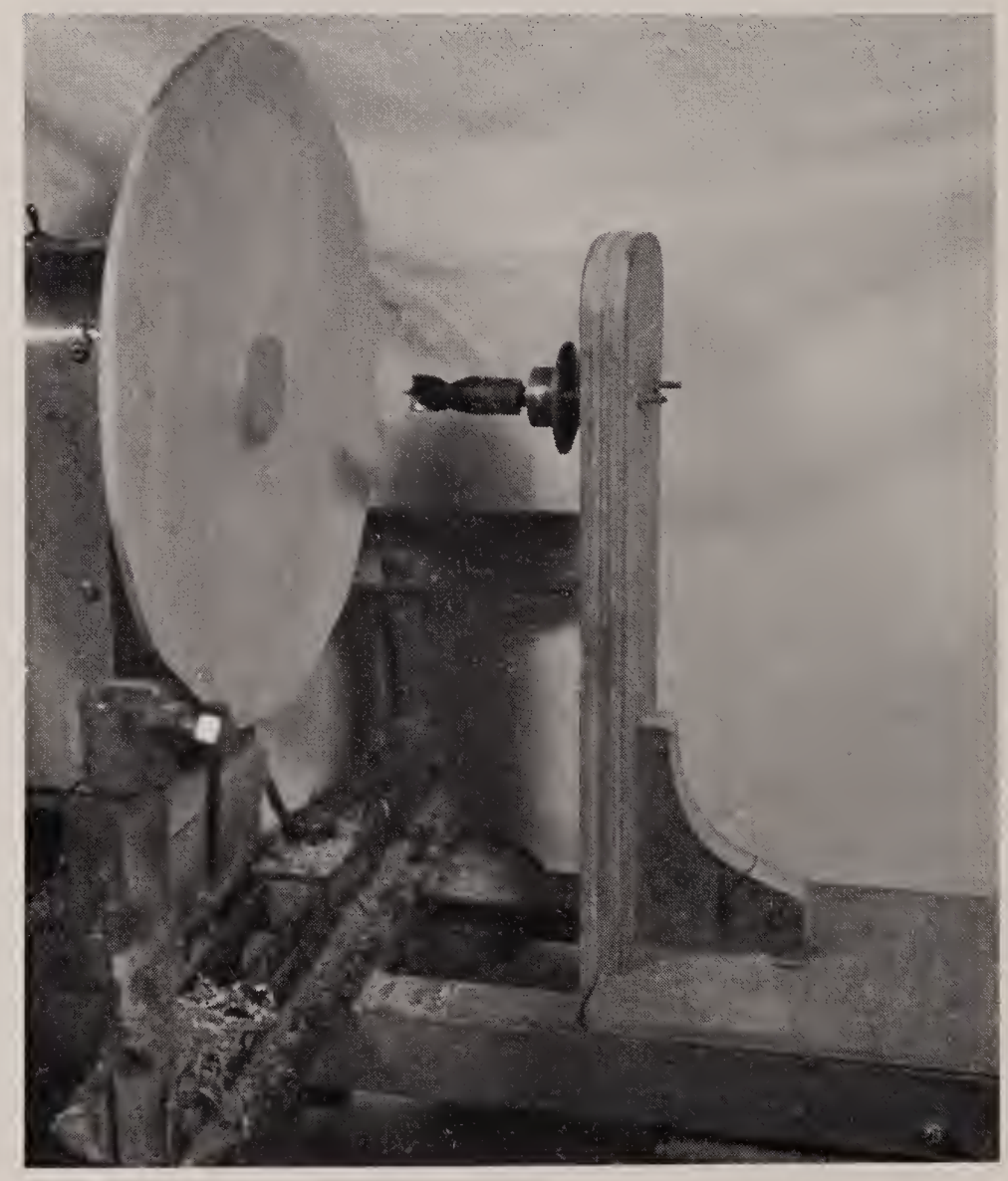

Figure 2A - 7. Drilling a Center Hole in a Headstock Lathe. When sliding this type of tail stock along lathe ways, apply pressure forward and downward. The latter keeps the twist drill horizontal.

7. Reshape the curved bottom of the dish and finish shaping the top surface. To give the dish edge an attractive contour, a sanding stick and spoke-shave can be used to form a round shape. A straight steel object, such as a 6″ ruler, can be used to check the flatness of the dish top surface. Following these operations, the complete dish is sanded.

8. A 1″ diameter hole needs to be drilled completely through the center of dish. This is achieved while the stock is still on the lathe, using a special drill chuck holder and twist drill. (See Figure 2A-7.)

Pedestal —

1. The between centers lathe turning technique is used to shape the pedestal. (See Appendix A-7.) Since the design of the pedestal is relatively simple, the stock is cut without the use of a lathe duplicator. The creative imagination of the craftsman can shape a design freehand and vary it according to the appearance desired.
2. Following the complete shaping and sanding of the pedestal, a 1/2″ diameter hole must be drilled in the top end. This operation is completed on the lathe using a drill chuck in the lathe tail stock. As the left hand holds the stock, position the twist drill point in the punched center hole. Drill to the desired depth. (See Figure 2A-8.)

Figure 2A - 8. Drilling a Center Hole on a Bed Lathe. Position the point of the twist drill in the stock center hole, and turning the lathe on, apply drilling pressure by rotating the tail stock handle. A piece of tape can be placed around the drill to indicate the correct depth to be bored.

Second Dish

1. The second dish of the lazy-susan is identical to the first, except that it has a smaller diameter. However, the same procedure is employed to form this dish, including the shaping, scalloping, and smoothing.
2. A 1/2″ diameter dowl joint will be used to assemble the pedestal, second dish, and finial. For this reason, it is necessary to drill a 1/2″ diameter hole through the center of this dish. Again, the same drilling procedure is used as for the 1″ diameter hole on the first dish.

Finial

1. The lathe duplicator is used to cut the finial. Follow the between centers lathe turning technique outlined in Appendix A-7 for the proper operations.
2. After the shape has been cut and sanded, a 1/2″ diameter hole must be drilled in the bottom end. Use a drill chuck and twist drill to complete this operation on the lathe.
3. To remove the finial from the waste stock, the same procedure as used for the Gavel and Block is repeated. Use a small key-hole saw to cut the stock, while it is held on the lathe by the opposite hand.

Finish

1. Because of spraying difficulties that might be encountered, the lazy-susan is finished before it is assembled.
2. Each separate part is finished with lacquer sealer and lacquer. See Appendix A-8 for the procedure used for finishing a wood product with lacquer.

Assembly

1. After cutting a short 1/2″ diameter dowl on the band saw, assemble the finial, second dish, and pedestal. Apply a small amount of glue to the inside surface of each piece of stock.
2. Locate the ball-bearing to the base using the same positioning device previously employed. With four small round head screws, fasten the bearing securely. (See Figure 2A-5.)
3. Using another locating device, join the base to the first dish, pedestal, and other portions. (See Figure 2A-9.) Screw the upper flange of the ball-bearing to the bottom of the first dish, using the previously drilled (offset) 1″ diameter hole in the base to complete this procedure. Be sure to apply some glue at the joint between the pedestal and first dish.

Figure 2A - 9. Assemblying Lazy-Susan. Do not remove the locator from the base until all four screws have been fastened through the top flange of the ball-bearing.

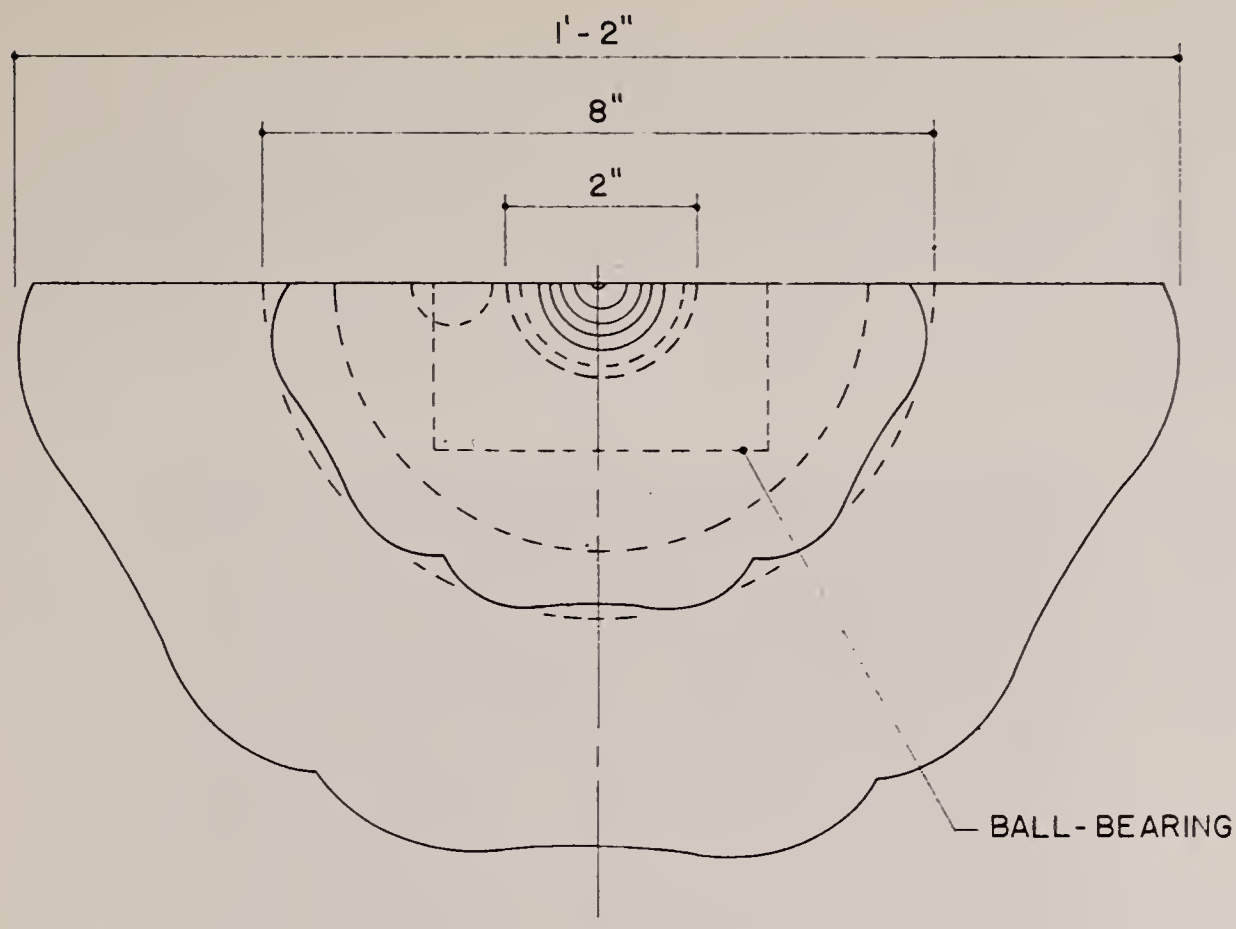
1'-2"
8"
2"
BALL-BEARING

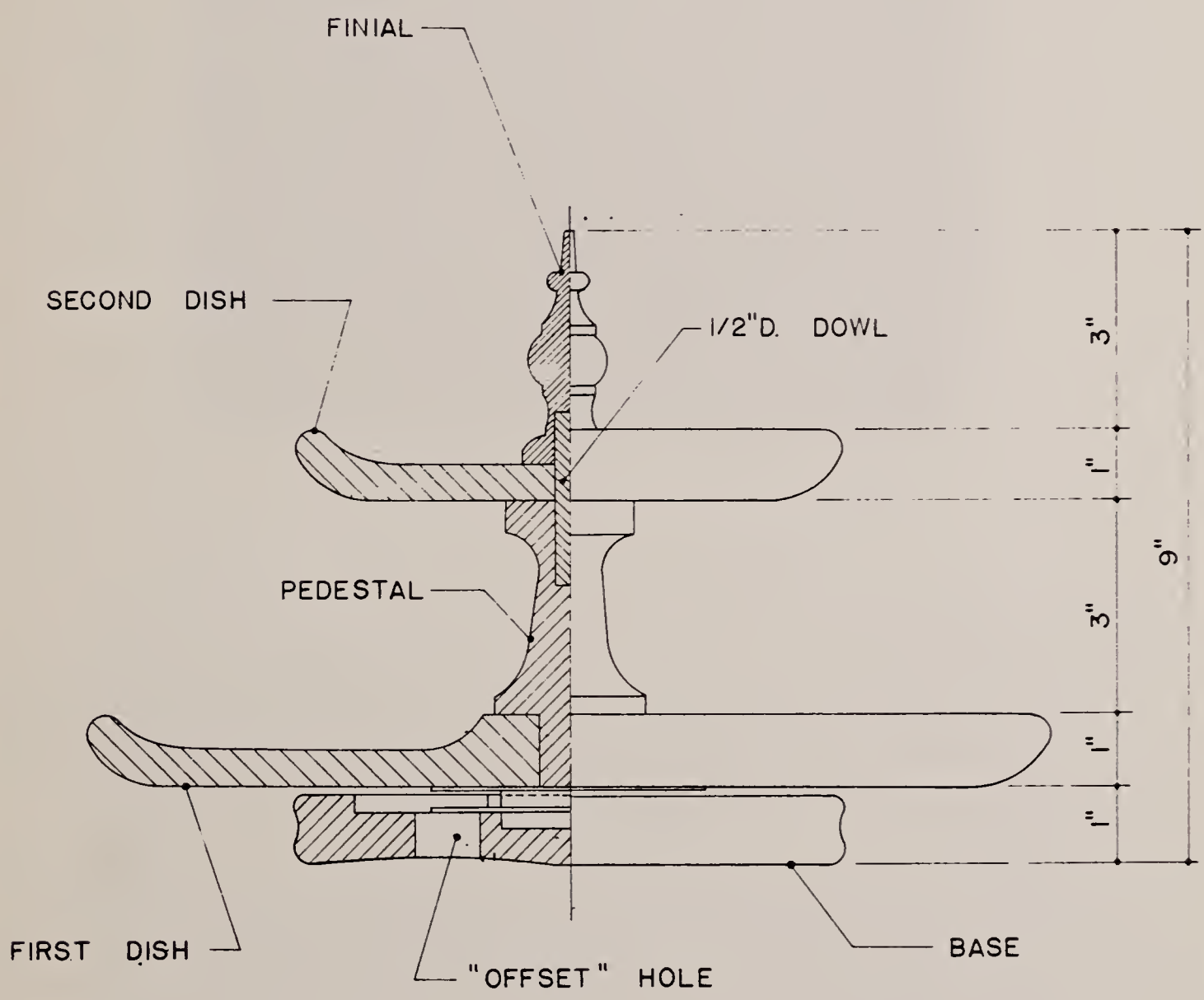
FINIAL
SECOND DISH
1/2"D. DOWL
PEDESTAL
FIRST DISH
"OFFSET" HOLE
BASE
3"
1"
3"
1"
1"
9"

CRUCIFIX

The simple design of this standing crucifix allows the product to be mass produced, while using a limited amount of construction procedures. The base of the crucifix makes it possible to locate the article on a flat surface, thus avoiding the mounting of it on a wall. Made of Philippine Mahogany, the crucifix can be purchased with or without a figurine, depending on the aesthetic tastes of the buyer.

Figure 2A - 10. Crucifix.

CONSTRUCTION PROCEDURE

Base

1. Choose three pieces of stock, all of the same thickness, for constructing the crucifix base. Using the circular saw, cut three blocks approximately 9, 7, and 5 inches square. Simply crosscut a scrap block off one end of the stock and with the saw fence set to the correct measurement, cut the length and identical width.
2. With the circular saw blade height set for approximately 1/3 the thickness of the stock, cut a center line groove on one face of each piece of wood. This saw cut must be made parallel to the direction of the wood grain. The saw fence is used to determine the center line location and cutting the stock.

3. Using the circle cutting procedure outlined in Appendix A-3, select the appropriate 9″, 7″, and 5″ plywood discs and locate the centers of the stock. Be sure that the centers are located in the previously cut grooves. Cut the square stock into circles on the band saw using the circle cutter. Before mounting each circle separately on the lathe, drill a small pilot and guide hole through the stock at the center.
4. The edge of the circles are shaped and sanded on the lathe using the screw center face plate technique. (See Appendix A-5.)
5. After cutting and removing each circle from the lathe, cut the stock into semi-circles on the band saw. This operation uses an aluminum guide, which centers the stock in reference to the saw blade and guides it in conjunction with the previously cut center groove. (See Figure 2A-11.) Smooth each straight edge of the semi-circles on the belt sander. Finally, hand sand the top face of each semi-circle using grades 6/0 sandpaper.

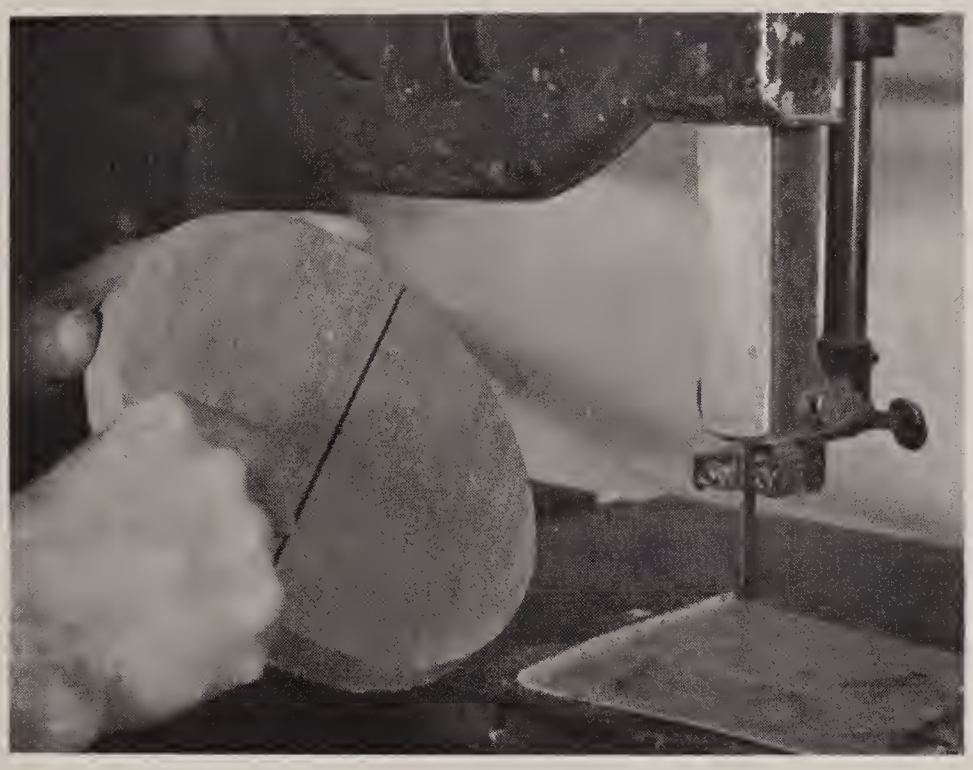

Figure 2A - 11. Cutting a Circle in Half on the Band Saw. Before clamping the cutting guide to the band saw table, use a try square to position it parallel and directly in line with the blade.

6. Glue the three different sized semi-circles together using the procedure described in Appendix A-1. To align the semi-circles, use a 1″ guide block to indicate the proper off-set between each piece of stock. The previously drilled pilot and guide hole through the center of the circles can also aid alignment. These three drilled center holes will form a straight groove on the back of the assembled base. After the glue has dried, the back edge of the base can once again be smoothed on the belt sander.
7. Using a 1/2″ dado blade set on the circular saw, cut a 3/4″ deep by 1″ wide groove in the center of the back edge of the base. The saw fence and a wood stop can be positioned so that the outside edge of the dado blade set is located 1/2″ off-center. By reversing the ends of the base after the first cut, a groove is cut exactly in the center of the base.

Cross

1. Select the desired stock in accordance to the type and size required. Cut and square the vertical and horizontal parts of the cross to the correct dimensions. Follow the squaring stock procedure of Appendix A-2.
2. A lap joint is used to join the two cross pieces. This joint is cut on the circular saw using a dado blade set and a pair of wood stops. With the blade height set at half the stock thickness, cut a groove on one face of each piece to the proper width.
3. Before assemblying the two parts of the cross, the bottom of the vertical piece needs to be cut to the correct size. This must match the 1″ groove in the base, if the joint is to be correctly made. Using the saw fence as a stop, cut the end of the stock to the size with the dado blade set. Turn the stock to cut each of the three different sides.
4. Completely sand all the surfaces of the two pieces of stock.

Assembly

1. With a small amount of glue on each joint surface, fasten the two pieces of stock to form the cross. Clamp the lap joint until the glue dries and be sure to follow the other recommendations stated in Appendix A-1.
2. After the cross is assembled, complete the product by gluing and tacking the cross and base together. Again, follow all recommended gluing operations.

Finish

1. The finish used for the crucifix is sprayed lacquer. The application of this finish is explained in Appendix A-7.
2. If a figurine is desired, it can be tacked to the cross after the finish has been applied.

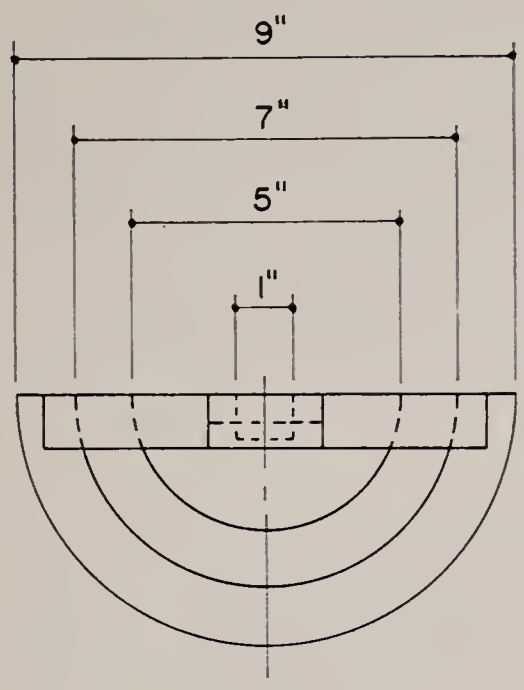
9"
7"
5"
1"

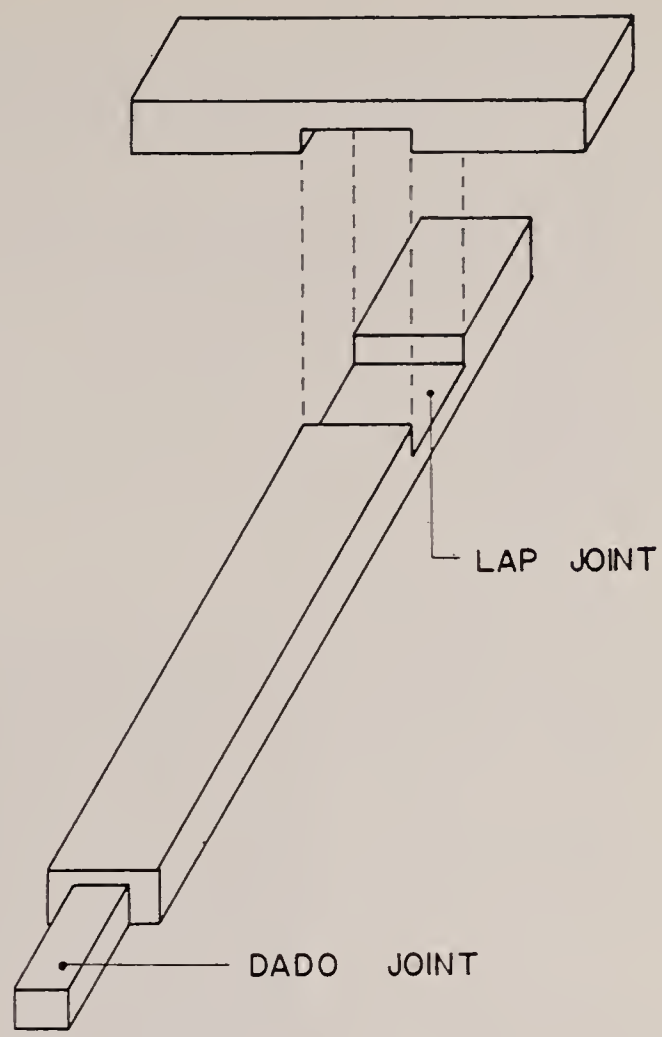
LAP JOINT
DADO JOINT

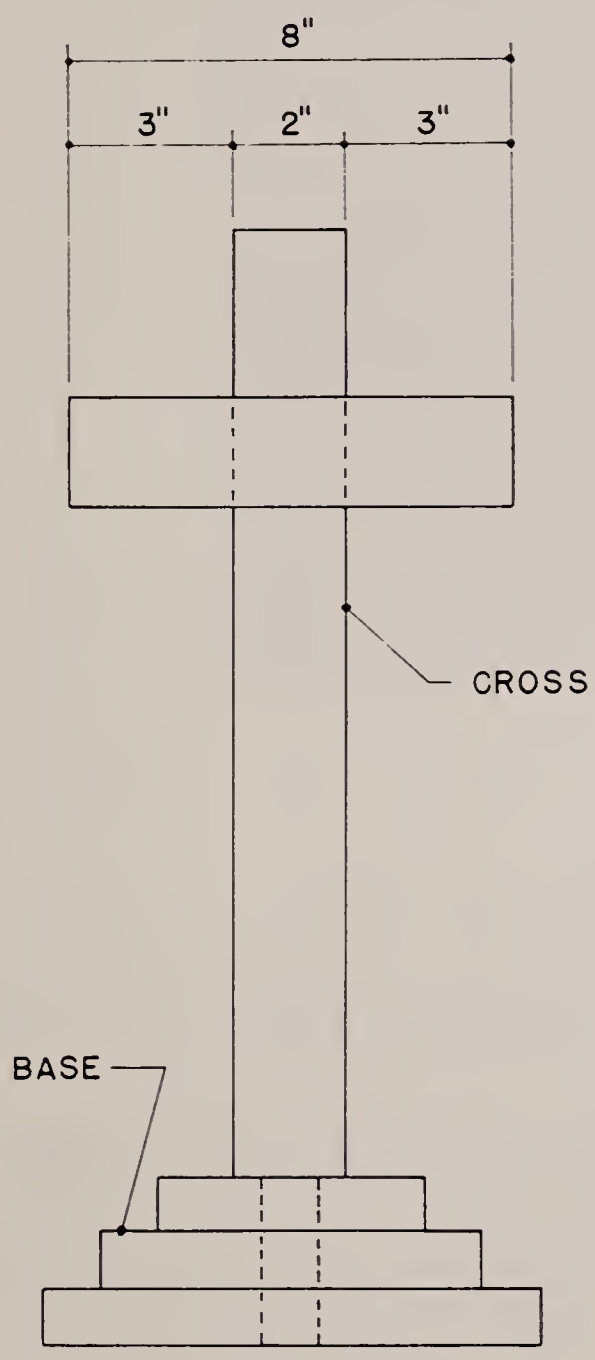
8"
3"
2"
3"
CROSS
BASE

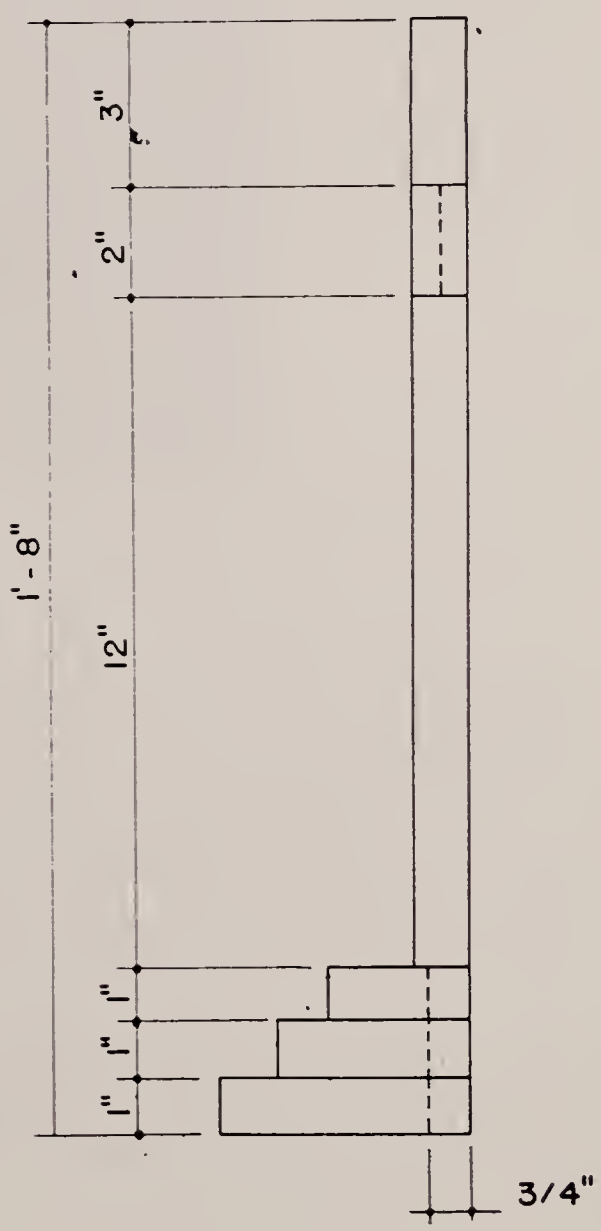
3"
2"
1'-8"
12"
1"
1"
1"
3/4"

EARLY AMERICAN TABLE

This Early American table of traditional design is a reproduction of those made several centuries ago. The product is so constructed that the scalloped table top can serve a functional objective while located horizontally, and a decorative purpose when it is rotated to the vertical position. The basic design can be altered by varying the diameter of the top or the style of the pedestal and legs. Made from African Mahogany, this piece of furniture is custom produced.

Figure 2A - 12. Early American Table.

CONSTRUCTION PROCEDURE

Table Top

1. The large table top diameter requires gluing (edge to edge) of several pieces of stock to properly form the needed dimension. See Appendix A-1 for the gluing procedure.
2. The procedure used for cutting the table top is identical to that employed for the first and second dish of the lazy-susan. On the lathe, the four screw face plate turning technique should be used to shape the top and bottom, while the scalloping device and drill press are used to form its edge. (Refer to Appendix A-5 and the construction procedure for making the lazy-susan dishes.)

3. Once the top, bottom, and edge of the table top are shaped, it is completed by sanding all the stock surfaces. It is not necessary to drill a hole through the center as was done for the lazy-susan dishes.

Pivot Strips

1. Two strips of wood must be cut and fastened to the bottom of the table top to enable it to be pivoted. The wood for these strips is first squared on the circular saw.
2. After the two pieces have been taped together and a template tacked to the side of the stock, the curved shape is cut on the band saw. Following the simultaneous cutting of the two pivot strips, each is contoured and sanded.
3. Five clearance holes must be drilled through the edge of each strip to provide a means of assemblying them with flat-head sheet metal screws. Since the drilled holes will be larger in diameter than the screws (to allow for possible table top expansion and contraction), sheet metal instead of round head wood screws are employed because of their larger head diameter. The center line scriber is used to mark the center line on the top edge of each strip. Measure the location of the five holes along the center line with a ruler. Mark the position of each hole with a self-centering punch and then drill the stock.
4. It is necessary to drill a hole through the side of each pivot strip to accommodate the brass pivot pin. The location of this hole is determined by the distance the pin is placed off-center through the pivot block and from its top edge. Use a drill that is approximately 1/32″ smaller in diameter than the pivot pin, to allow for a press fit. Drill these two holes on the drill press and resand them if necessary.
5. It is now possible to assemble the two pivot strips to the bottom of the table top. Position them in reference to the center of the top and the width of the pivot block. Caution: Do not apply glue to this joint.

Pedestal

1. Select the stock and prepare it for turning between centers on the lathe. (See Appendix A-7.)
2. After mounting the stock on the lathe and shaping it to a uniformed cylinder, cut the pedestal top (right end of stock) to a uniform 1 1/4″ diameter, leaving an extra amount of wood as waste. This end of the pedestal receives the pivot block.
3. Using a pattern pedestal as a template, mark off the total length of the pedestal with an awl as the stock rotates. Also mark off the total length of the pedestal base to which the legs are fastened. (See Figure 2A-13.)
4. Since the pedestal base diameter must be perfectly uniform, it is best to cut (with a parting tool) this correct measurement at several places. Use a caliper to gauge these dimensions. (See Figure 2A-14.) After this completed, a round nose cutting tool is used to cut the remaining stock between each of these guide cuts.
5. The design for the main portion of the pedestal is shaped primarily with a small round nose turning tool. The major curves of the design are located by using the pedestal template as a reference. From these

Figure 2A - 13. Marking Stock Lengths on a Bed Lathe. Position the template in reference to the cut right end of the stock and hold the awl securely on the tool rest while marking the correct length.

Figure 2A - 14. Measuring Stock Diameters with a Caliper. To prevent overcutting, hold the caliper in the guide cut being shaped with the parting tool.

locations, the desired pattern is shaped freehand, relying on the cutting skill and creative ability of the craftsman.

6. Accent the curves and indentations of the pedestal, after the rough shaping has been completed, by using the diagonal and large round nose turning tools. Use a half round and flat file to help smooth the contours and to minimize the amount of sanding needed. Sand the complete pedestal with three grits of sandpaper before it is removed from the lathe. Do not remove the waste stock at each end of the pedestal, for it will be placed on the lathe again.

7. Three flat surfaces on the pedestal base are required to receive the legs. These surfaces are cut on the drill press using an end mill cutting bit for wood, and a set of plywood triangles. Screw the triangles to the center hole on each end of the pedestal. After aligning them on a flat surface, tack a small nail into the pedestal ends (through the triangles) to prevent them from moving during the cutting operation. Clamp a scrap block of wood on the left end of the drill press table top to ensure that the cuts stop at the end of the pedestal base. (See Figure 2A-15.) Make several light cuts by varying the depth of the drill chuck and bit until the correct width (approximately 1/8″ wider than the leg thickness) of the flat surface is achieved. Rotate the pedestal and triangles to cut the other two surfaces.

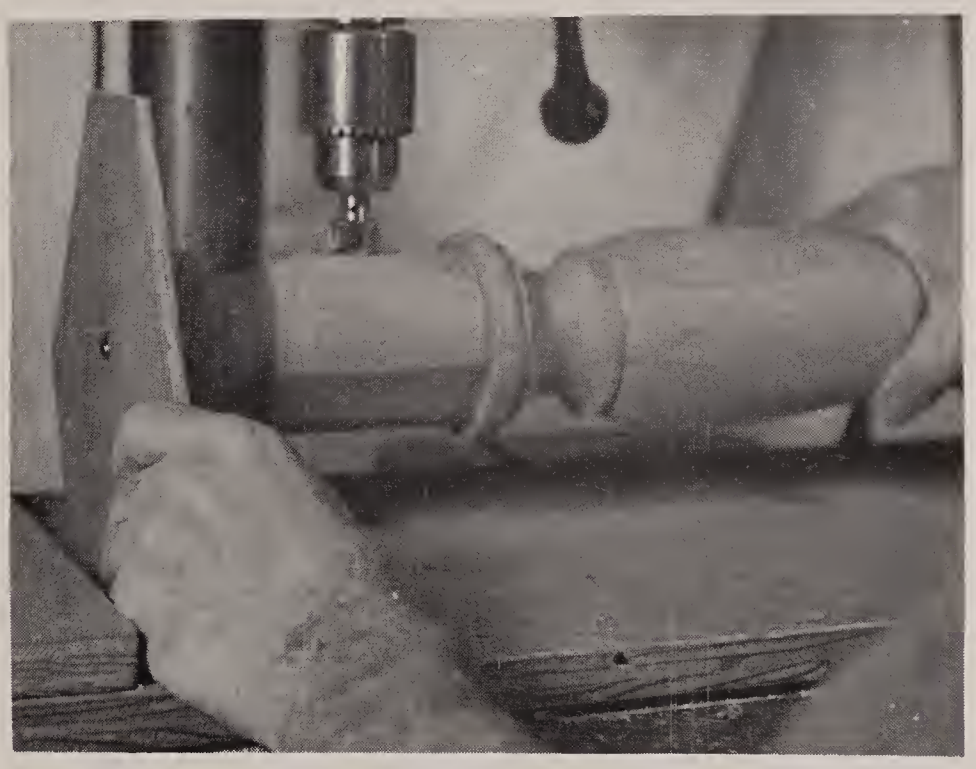

Figure 2A - 15. Milling a Flat Service on the Drill Press. Lock the drill press quill to the correct depth in order that both hands can be used to move the stock about as it is shaped by the end mill cutter.

8. Since a dowl joint is used to fasten the legs to the pedestal, two holes must be drilled in each flat surface on the base of the pedestal. Place a special centering device parallel and flush to the previously cut surfaces. Tap the two nails firmly, to locate the dowal hole centers. (See Figure 2A-16.) Using a 3/8″ diameter twist drill, bore the two holes in each flat surface of the pedestal on the drill press. Leave the triangles still fastened to the ends of the pedestal for alignment purposes.

Figure 2A - 16. Locating Hold Centers Using a Drill Jig Guide. Scrap stock is placed under the pedestal before the drill jig guide nails are hit with a hammer. This avoids any possible movement of the triangles.

Figure 2A - 17. Drilling Dowl Joint Holes with a Leg Vise. It is extremely important that the vise holds the leg stock securely, for any movement will be unnoticed during the drilling operations, yet cause alignment problems during assembly.

9. Remove the triangles and place the pedestal back on the lathe. Cut the waste stock off each end of the pedestal so that the live and dead center marks, screw holes, and nail holes will not remain a part of the finished pedestal. A description of the procedure used for this operation is outlined in detail for the gavel and block.

Legs

1. Tack a leg template to a squared piece of stock and cut the proper shape on the band saw. Repeat this operation for each of the three legs.
2. Using the same centering device employed to locate the holes on the pedestal base, position it on the top end of the legs. Again, tap the two nails firmly to locate the dowel hole centers.
3. A special vise is required to hold the legs when they are drilled on the drill press with the 3/8″ diameter twist drill. (See Figure 2A-17.) Make sure that the top edge of the leg is parallel to the top edge of the vise. Repeat this drilling operation for each leg.
4. Using a spoke-shave and a small block plane smooth the edges of each leg. After the edges are shaped, the first of three fluted grooves can be cut on the front edge. The center fluting tool is used first to make a groove in the center of each leg edge, parallel to the leg sides. (See Figure 2A-18.)
5. Before the two outside flutes can be cut, the legs have to be tapered. With the jointer in-feed table set to the correct depth, cut (at the bottom end of the legs) a short notch on the leg's two sides. See Figure 2A-18 for an illustration of these two notches. The two notches should provide a stock width equal to the dimension of the brass feet which are later tacked to the finished legs. A hand plane is used to taper the legs, while a clamp holds the stock flat on a work bench. Use the two notch depths to determine the amount of taper.

Figure 2A - 18. Edge and Center Fluting. For best results, the stock is clamped in a vise during the fluting operations. The tools are always pushed in the direction away from the woodworker.

6. Once the legs are tapered, the two outside flutes can be cut parallel to the tapered sides. Figure 2A-18 shows how this operation is completed.

Sand the three legs before fastening them to the pedestal.

7. Short dowls must be cut on the band saw for use in making the pedestal and leg joint. Glue the dowls in the holes in the legs, and then assemble the legs to the pedestal base. Be sure to glue this half of the joint.

Pivot Block

1. Cut a piece of stock with the proper thickness into the square shape of the pivot block.
2. Locate the center of the stock face using a plywood disc and drill a 1 1/4″ diameter hole at this point. The depth of the hole is determined by the length of the top portion of the pedestal. Use the drill press and a forstner bit to bore the hole.
3. It is recommended that several screws be used to fasten the pivot block to the pedestal. Drill these screw holes on the drill press after their location has been determined on the stock face. A scribed diagonal line from two corners can best position the centers for these holes. Countersink the drilled holes to receive the flat head screws.
4. A pivot pin clearance hole has to be drilled through the edge of the block. This hole is located at the front top corner of the block to correspond to the pivot pin holes drilled in the pivot strips.
5. To help make the rotating movement of the table top easier, the top front edge of the block should be rounded. This simple curve can be shaped with a block plane and file.
6. With a small chisel, cut a wedge shape notch in the edge of the block opposite the pivot pin. This notch is located in the center of the edge width and thickness. The notch will receive the projecting button on the locking latch located on the table top bottom.
7. After sanding the pivot block, fasten it to the top of the pedestal with wood screws and glue. *Position the block in a direction that places the pivot pin perpendicular to one of the three legs.*

Finish

1. Because a high quality finish is desired, lacquer is used to complete the Early American table. (See Appendix A-8.)
2. The table top and pivot strips are sprayed simultaneously, while the legs, pedestal, and pivot block are all finished as one unit.

Assembly

1. After completing the spraying operation and allowing the finish to dry thoroughly, the two portions of the table can be assembled. A brass pivot pin is forced through one pivot strip, through the pivot block clearance hole, and into the opposite pivot strip hole.
2. To hold the table top horizontal, a brass latch is screwed on the bottom side. The location is determined by the previously cut notch in the pivot block edge.
3. Tack the three brass feet to the ends of the tapered and fluted legs to complete the table.

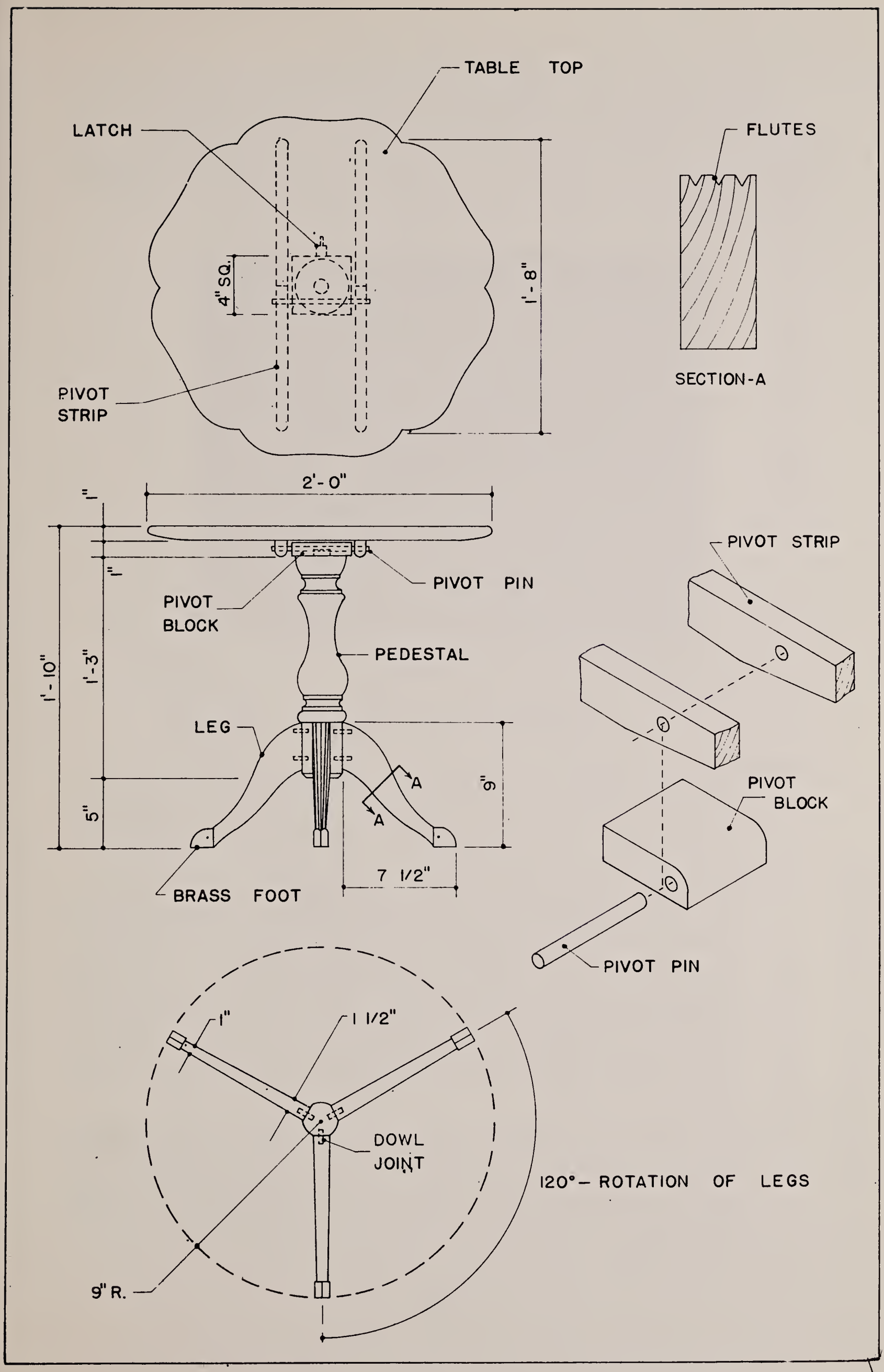
TABLE TOP
LATCH
4" SQ.
1'-8"
PIVOT STRIP
FLUTES
SECTION-A
2'-0"
1"
1"
PIVOT BLOCK
PIVOT PIN
PEDESTAL
1'-10"
1'-3"
LEG
A
A
9"
5"
7 1/2"
BRASS FOOT
PIVOT STRIP
PIVOT BLOCK
PIVOT PIN
1"
1 1/2"
DOWL JOINT
120°- ROTATION OF LEGS
9" R.

GAVEL AND BLOCK

This decorative gavel and block is produced to serve a functional purpose. Although the basic design or shape does not alter, a variety of appearances are achieved by changing the species of wood used for its manufacture. Birch, Brazilian Rosewood, and walnut are primarily used. Mass production operations may be employed during the construction of the gavel, for the lathe duplicator provides the copying operations needed for its rapid duplication.

Figure 2A - 19. Gavel and Block.

CONSTRUCTION PROCEDURE

Gavel Head

1. Using the construction operations outlined in Appendix A-7, prepare the stock for the gavel head. To increase the efficiency of the construction procedure, a large supply of pre-cut stock should be prepared prior to the use of the lathe duplicator.
2. Before the lathe duplicator can be properly used, it must be located on the lathe in reference to the wood stock. Mount a previously cut gavel head between centers, making sure that it is correctly held by the live and dead centers. Set the duplicator on the lathe using the tool rest clamp. The exact position of the duplicator is accomplished by placing the duplicator cutting tool against the gavel head template and aligning the cutting tool stylus against the duplicator matrix. Diagram II illustrates this procedure. After the duplicator is clamped in position and the gavel head template is removed, mount the stock to be cut between the lathe centers.
3. The shape of the gavel is achieved by forcing the duplicator stylus against the matrix, causing the cutting tool to cut the stock. The best results are obtained by first cutting the center section of the object being shaped, and then proceeding towards the two outside ends. Following the complete shaping of the stock, it is sanded using the proper sequence of sandpaper.

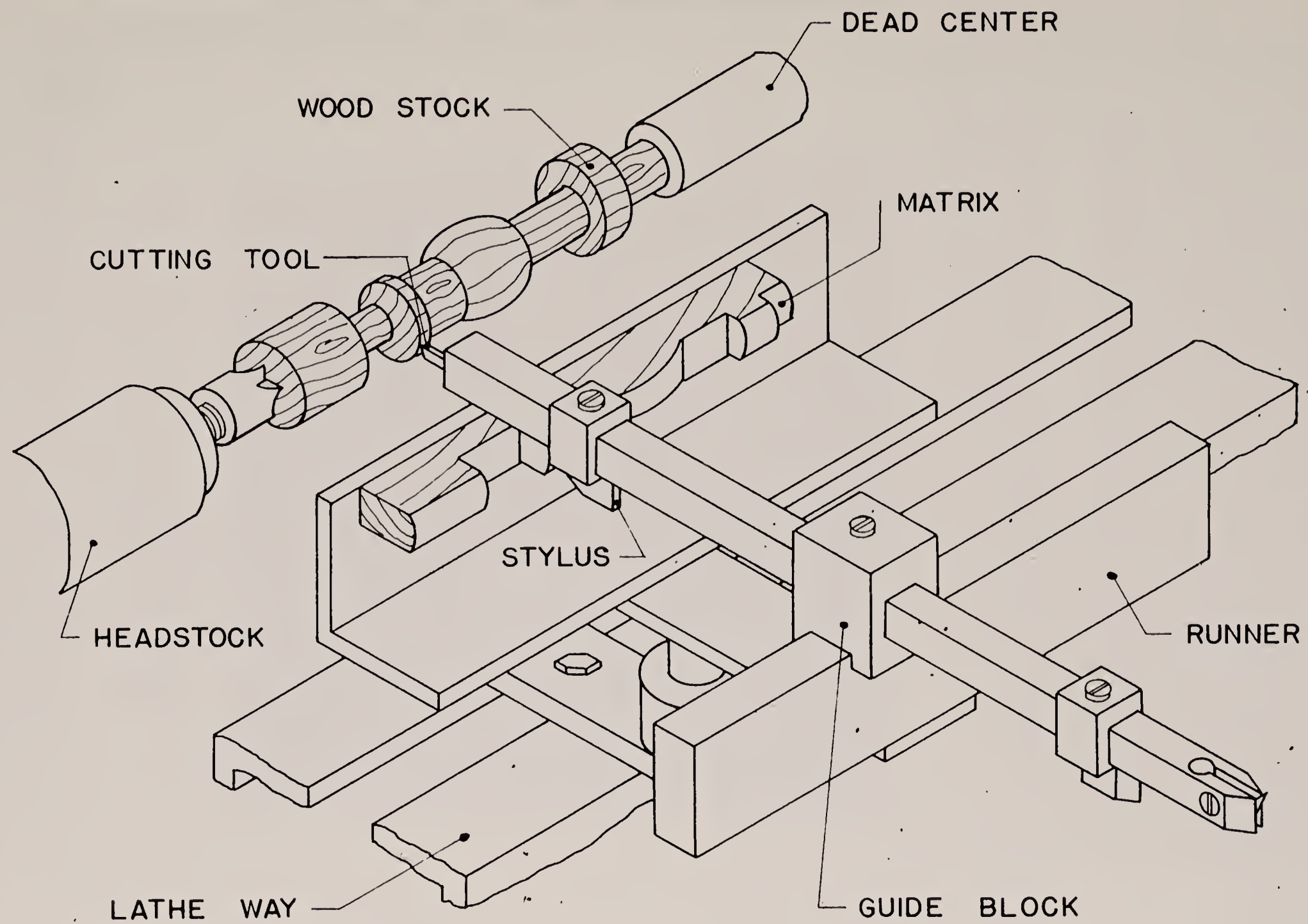

PATENT No. 3,277,933

4. To complete the lathe operations, it is necessary to cut the gavel head from the waste stock remaining at its ends. This entire operation is completed while the lathe is turning the stock. Using a small key-hole saw, cut between the gavel head and waste stock on the left end. Do not cut completely through the stock. Repeat this cutting operation at the right end of the gavel head, this time cutting completely through the stock. Make sure that the left hand is securely holding the gavel head against the live center while cutting. Change hand position, so that the right hand holds the gavel head, and finish cutting the left end of the stock.
5. Using the belt sander, smooth the two cut ends of the gavel head. Rotate the stock as it is being sanded, to eliminate any saw marks that might run opposite the wood grain.
6. Mount a V drill block on the drill press. Locate then block properly by using a centering rod in the drill chuck and aligning it to the bottom and center of the V block. Using the correct diameter twist drill, drill a hole approximately 3/4 through the thickness of the gavel head. (See Figure 2A-20) for this drilling operation.

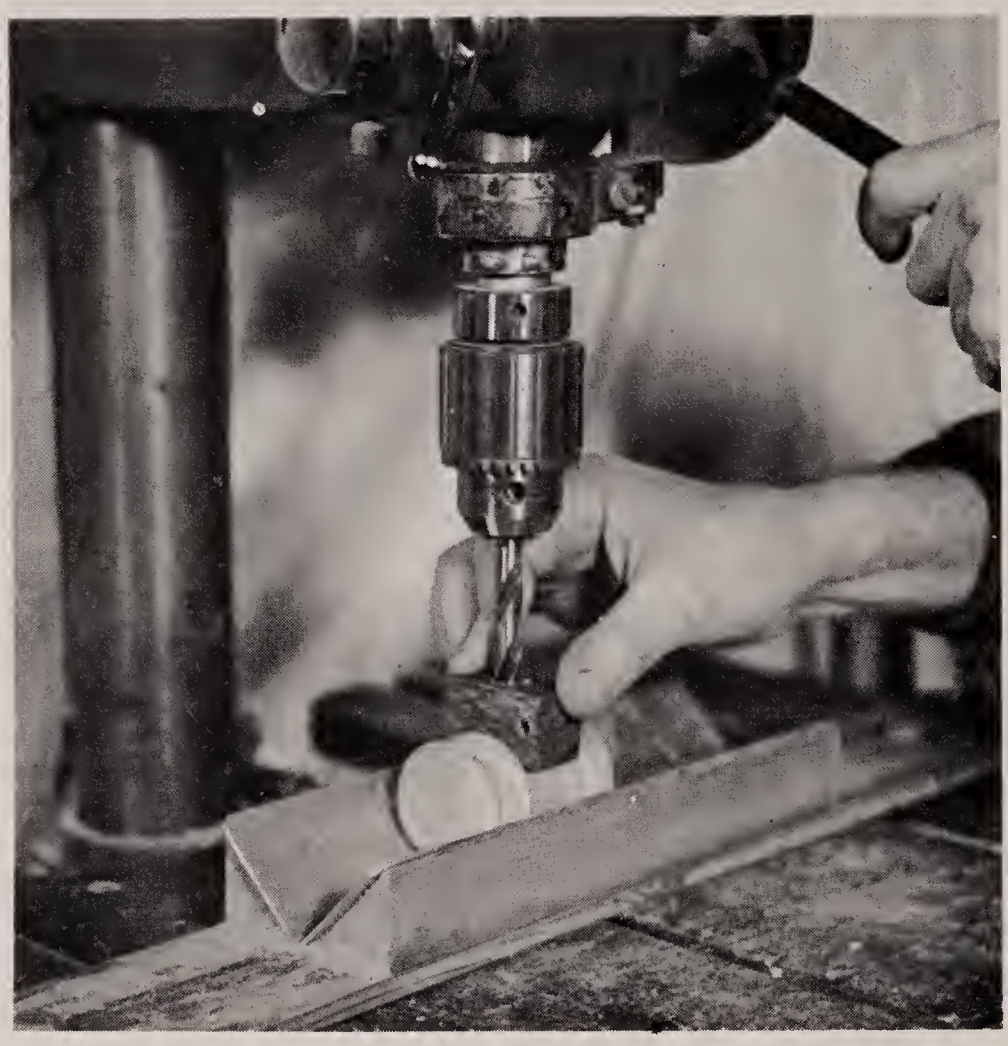

Figure 2A - 20. Drilling Stock with a V Block and Positioning Guide. The centering jig is first placed around the center of the gavel head and then both are positioned under the twist drill.

7. Using a commercial #7 wood cutting tap, cut a thread in the drilled hole. A wood cutting tap is required, for the thread width needs to be larger for wood than metal.

Gavel Handle

1. Since the gavel handle is made on the lathe duplicator, the same pro-

cedure used for the gavel head is employed. After placing the stock and locating the duplicator, the shape is cut. Again, the stock is removed from the lathe using the key-hole saw, and sanded on the belt sander.

2. After the handle is completely shaped, a thread needs to be cut to match the gavel head. A commercial wood die is used to finish this operation.*
3. A brass band is often placed around the center of the gavel head. Mr. Lalli has a sighted person cut this metal.

Block

1. The gavel block is cut and shaped on the lathe using the screw center turning technique. The procedure is outlined in Appendix A-5.

Finish

1. The gavel head, handle, and block are all finished with lacquer before they are assembled. The spraying procedure is outlined in Appendix A-8.

Assembly

1. After the complete finish is applied and thoroughly dried, the gavel handle is screwed into the head. The metal band must first be placed around the gavel head center, since the handle holds it in the proper position.

*If a wood cutting tap and die are not available the end of the handle should be turned to a dimension to make a tight glue joint in a standard drilled hole in the head of the gavel.

AMERICAN FOUNDATION FOR THE BLIND
15 WEST 16th STREET
NEW YORK, N.Y. 10011

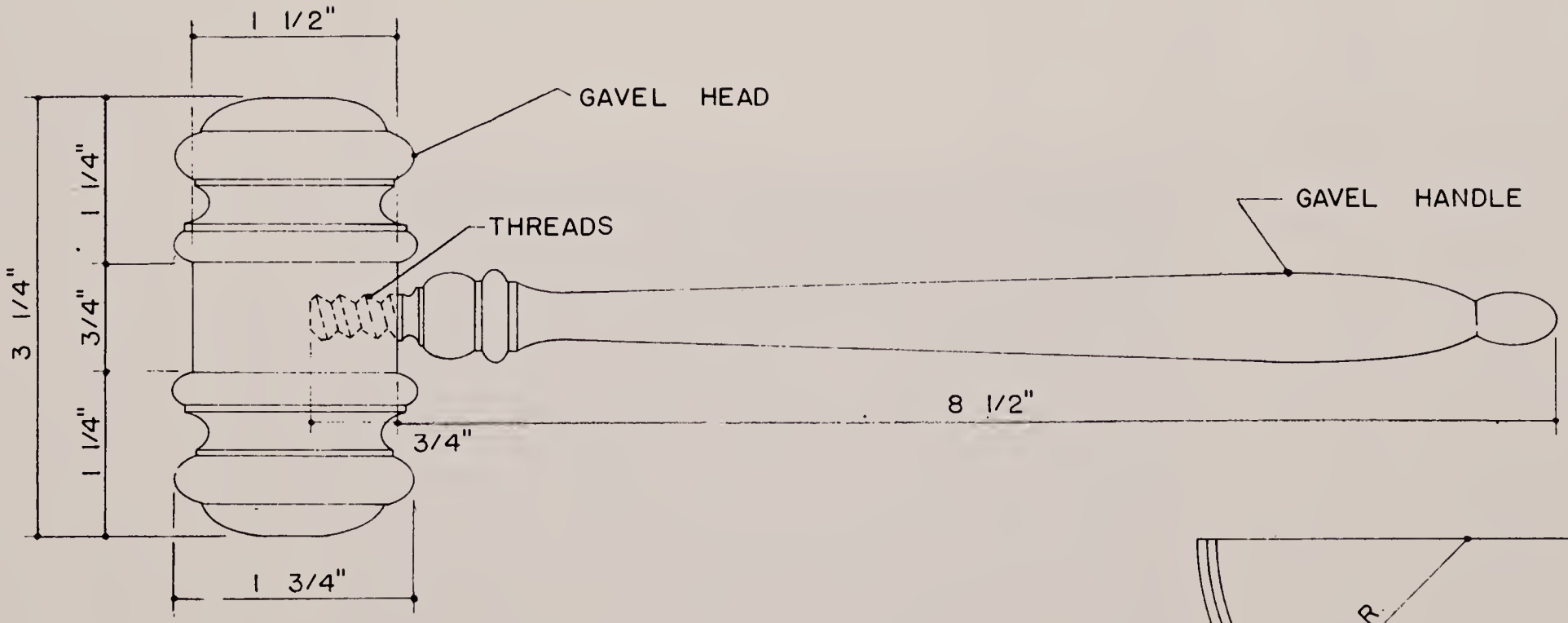
1 1/2"
GAVEL HEAD
THREADS
GAVEL HANDLE
3 1/4"
1 1/4"
3/4"
1 1/4"
8 1/2"
3/4"
1 3/4"

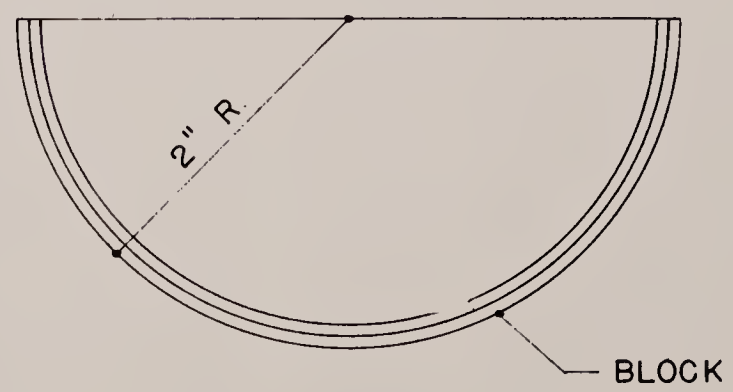
2" R.
BLOCK

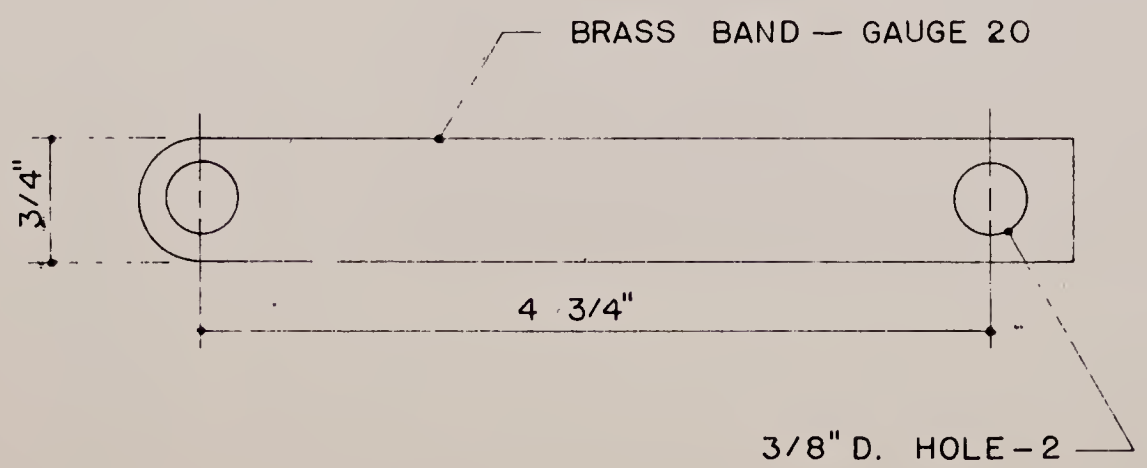
BRASS BAND — GAUGE 20
3/4"
4 3/4"
3/8" D. HOLE – 2

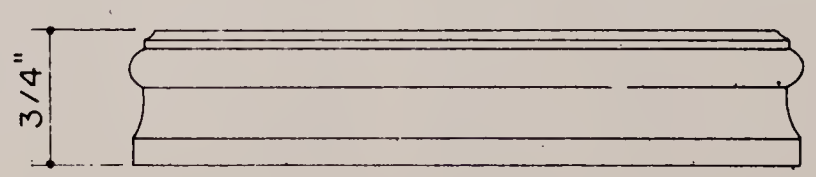
3/4"

DROP - LEAF TABLE

This table, made from yellow or white pine, can double as an end or serving table, depending on the functional purpose desired. Although this particular table is fairly small, the size can be increased by proportionally enlarging the table top dimensions while changing the length and position of the legs. However, it must be remembered that each hinged drop-leaf adds an increasing amount of table surface area when positioned horizontally. Because of the possible variances in size and design, the drop-leaf table is custom produced.

Figure 2A - 21. Drop-Leaf Table.

CONSTRUCTION PROCEDURE

Table Top and Leaves

1. When making an item such as a table top, it is often necessary to glue (edge to edge) several pieces of wood together. This is required for both the table top and the two leaves. A small scrap block (3″ x 3″ x 3/4″) must be temporarily glued at the center of one edge on each leaf. (See Figure 2A-22.) This is used during the semi-circle cutting operation on the band saw. Follow the procedure described in Appendix A-1 when gluing the stock.
2. After the glue joints have adequately dried, any excess glue that might have seeped onto the stock surfaces must be removed. Hand scraping with a metal scraper, followed by a light planing, usually prepares the wood for sanding. It is not recommended to completely sand the stock at this point, since the table top and leaf shapes still need to be cut.
3. Since the table top is rectangular, it is simply cut to the proper size and shape on the circular saw.
4. The semi-circle shape of the leaves is cut on the band saw using the circle cutter. However, to be able to use the circle cutter, it is necessary to have a punched center hole that can rotate on the pivot pin. With the use of the dividers, the center hole can be located at the joint between the stock edge and scrap block. Be sure that the block is equally distant

from each end of the stock. (See Figure 2A-22.). Once the punched hole is made for each leaf, the stock can be cut. Remove the scrap block after cutting the semi-circle.

Figure 2A - 22. Laying Out a Semi-Circle. The initial setting of the dividers is determined by the width of the stock, then rotated to locate the punched center hole equally distant from the ends.

5. With the use of a spoke-shave and a small block plane, the semi-circle cut edge of each leaf can be smoothed and rounded. Once this has been completed, the ends of the table top can also be identically shaped. Avoid the splintering of the end grain when shaving and planing by always cutting in the direction away from the outside edge of the stock. Following the shaping of the edges on the three pieces of stock, a final sanding of all surfaces is required.
6. It is important that the hinges now be fastened to the bottom of the table top and leaves, since their location affects the size and construction of the leg frame. The correct position for each hinge is found by placing its barrel over the joint between the top and leaf, and measuring a standard distance with a ruler from the end of the top. (See Diagram III.) Use a self-centering punch to locate the four screw holes. Mount the four hinges with the flat head screws provided with the purchased hinges.

Leg Frame

1. The rectangular leg frame is constructed from four pieces of stock, each with the same width and thickness. The squaring stock procedure outlined in Appendix A-2 is used when cutting these pieces on the circular saw.
2. The length of each piece is determined by measuring it directly on the assembled top and leaves. The two side pieces marked in reference to the length of the table top, shortening them approximately 1 1/4″ to allow for an equal overhang at each end. The length of the two end pieces is determined by the distance between the two side pieces when they are both resting against the edge of the hinges on each side of the

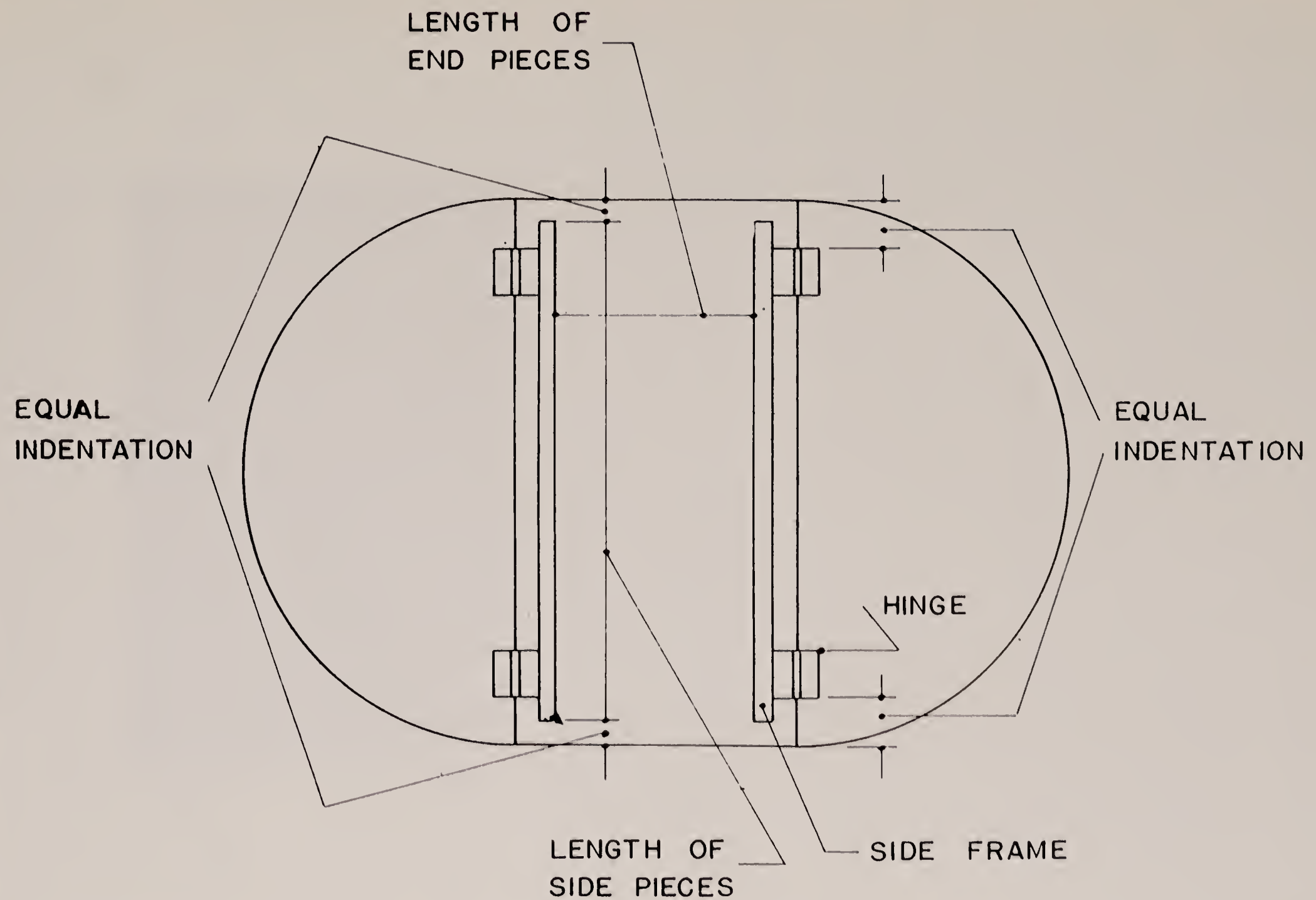
LENGTH OF
END PIECES
EQUAL
INDENTATION
EQUAL
INDENTATION
HINGE
LENGTH OF
SIDE PIECES
SIDE FRAME

table top. (See Diagram III.) After marking the correct length, the four pieces are cut on the circular saw.

3. A slot in the two side pieces must be cut on the circular saw to accommodate the sliding leaf supports that hold the leaves horizontal. After finding the center of the length on each side piece, a 1″ wide x 3/4″ deep slot is cut in the edge of the wood. On one side piece, the slot is cut to the left of the center, while on the other, it is cut to the right of the center. This permits an offset for the two sliding leaf supports.
4. Flat head screws are used to fasten the leg frame to the table top. It is necessary to counter-bore for these screws, since the leg frame width is much larger than standard wood screw lengths. To guide the placement of the drill, use a center line scriber to locate the center of the stock edge. Using a drill with a diameter equal to the screw root diameter, bore two holes through the edge of each side piece and one hole in the end pieces. Counter-bore approximately 1/2 the stock width, with a 3/8″ diameter forstner bit. Completely sand the four leg frame pieces before fastening them to the table top.
5. Mount the leg frame to the table top using a small amount of glue and flat head screws. Be sure to space the side pieces equally distant from each end and flush against the hinges. Position the end pieces in reference to the ends of the two side pieces. Check the complete frame with a try square before fastening the screws.

Legs

1. Before the legs can be shaped, their length, width, and thickness must be cut and squared on the circular saw. (See Appendix A-2.)
2. With the jointer in-feed table set for an approximate 3/8″ deep cut, the squared legs are tapered. Use a clamp at each end of the jointer for stopping the stock at the proper distance. Be sure to allow enough stock at the top end of the legs to match the leg frame width. Rotate the legs to taper each side. (See Figure 2A-23.)

Figure 2A - 23. Tapering a Leg on a Jointer. The stock is held against the infeed table and fence at the beginning of the cut; even pressure is applied to both the infeed and outfeed table, and then just to the outfeed table.

3. The top end of the legs must be cut in order that they lap over the side and end frame pieces. This cut is made on the circular saw with the blade height set for the frame stock thickness (minus approximately 1/8″.) The saw fence can be set as a stop to determine the maximum length of the cuts along the length of the legs.
4. For assembly purposes, two screw holes are drilled through the uncut portion of the leg tops. The center line scriber can determine the location of the holes. Again, the screw root diameter determines the drill diameter. Use a countersink bit to countersink the flat head screws. Be sure that the drilled holes are located in the direction facing the side frame pieces.
5. Before the legs are assembled to the frame, the belt sander is used to contour them. Rounded leg bottoms and corners make them more attractive. Finally, the four legs are thoroughly sanded with a sequence of three sandpaper grits.
6. Fasten the legs with screws and glue to the side frame piece using a sliding-T-bevel to slightly slant the leg bottoms outward.
7. Following the complete assembly operation, short triangular shaped scrap blocks of wood are glued to the legs and inside of the frame to help reinforce the screw joints. These also hold the legs and end frame pieces square to the side frame pieces.

Sliding Pins, Pin Guide, and Wedges

1. Two sliding pins are cut and squared on the circular saw. The size must correspond with the slot made in the two side frame pieces. A 1/4″ diameter hole is drilled at one end of each pin to insert a short dowl to serve as a handle.
2. A pin guide is cut on the circular saw. At the center of the guide length, a slot is cut in its edge. This slot must be large enough to hold the two pins, plus allowing for their free movement. Two holes are drilled and countersunk through the edge of the guide to permit its fastening with wood screws.
3. With the two sliding pins placed through the slots in the side frames, the pin guide can be mounted over them and then fastened to the bottom of the table top.
4. To help keep the leaves in a perfect horizontal position, two small slivers of wood are cut on the band saw and glued to the bottom of the leaves. Determine their location by placing them directly in the path of the pins.

Finish

1. Since the blond color of the pine is desired, a clear finish is required. The simple application of shellac makes it ideal for this purpose. Follow the procedure in Appendix A-10 for the finishing operations.

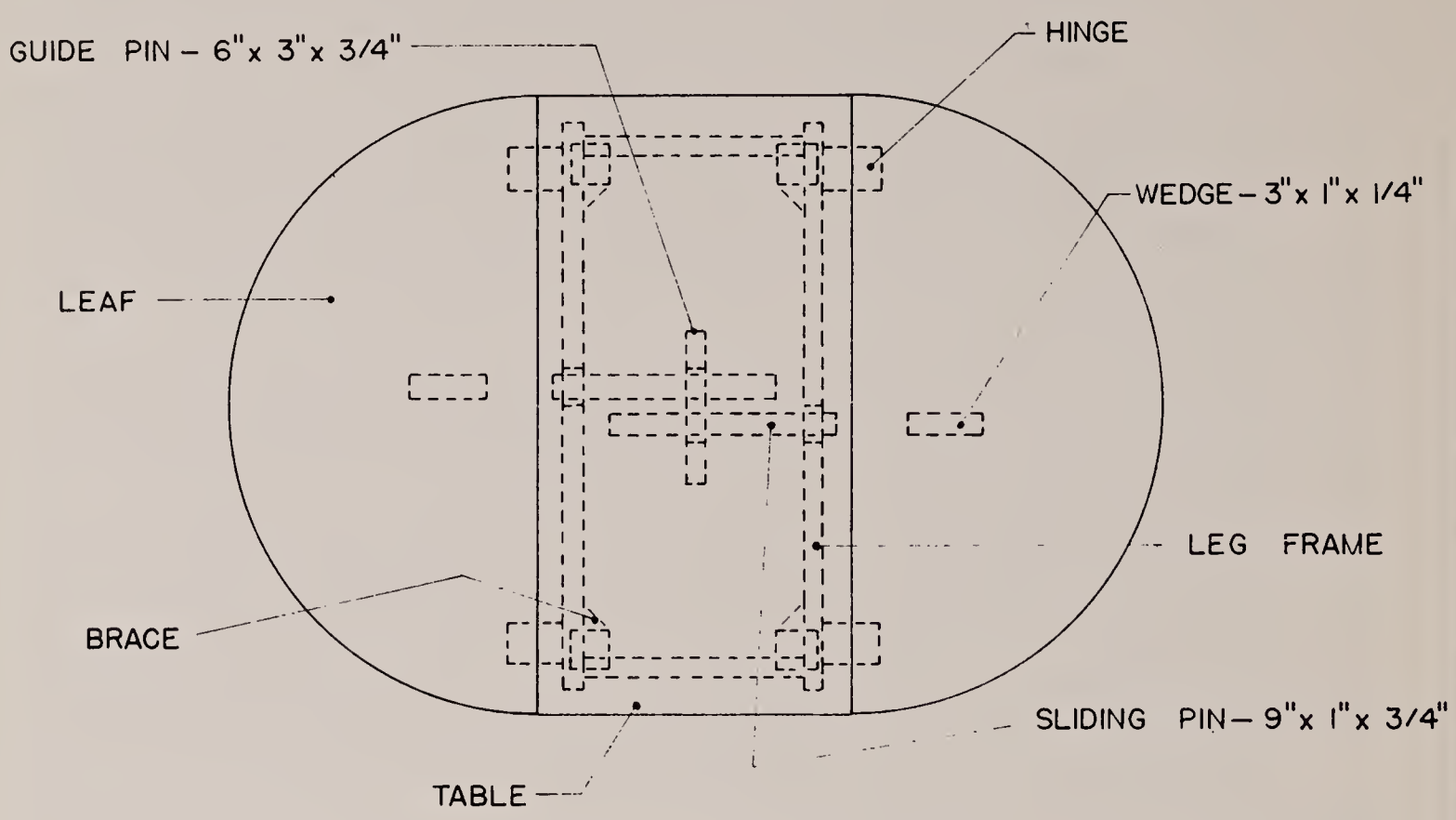
GUIDE PIN – 6"x 3"x 3/4"
HINGE
WEDGE – 3"x 1"x 1/4"
LEAF
LEG FRAME
BRACE
SLIDING PIN – 9"x 1"x 3/4"
TABLE

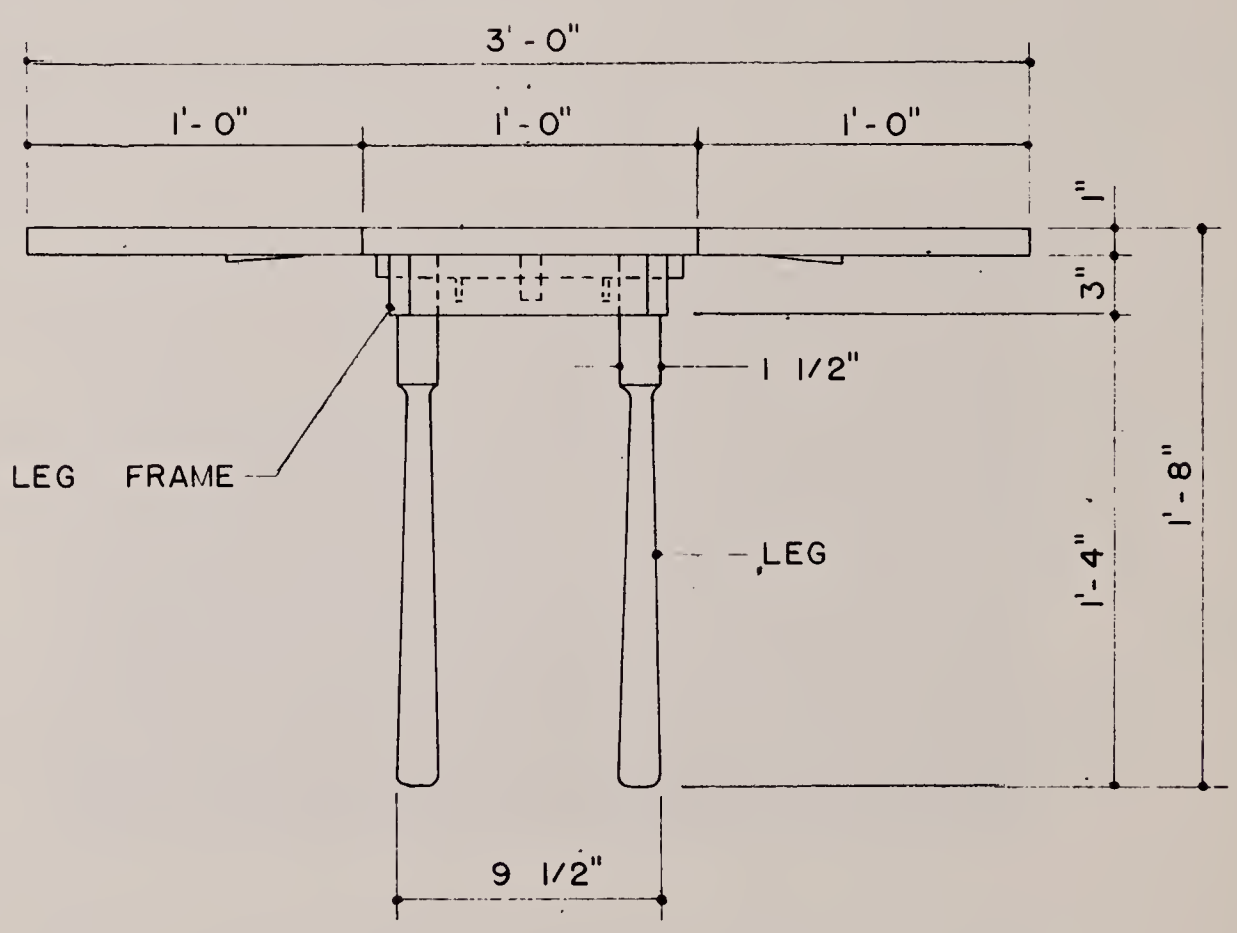
3' - 0"
1'- 0"
1' - 0"
1' - 0"
1"
3"
1 1/2"
LEG FRAME
LEG
1'- 4"
1'- 8"
9 1/2"

WORK OF THE PAST TEN YEARS

PART B

The first part of this chapter has been devoted to the detailed construction procedure for six wood products. To conclude this section of the bulletin without describing a number of other objects would result in an injustice to the other articles manufactured by Mr. Lalli. For this reason, Part B of this chapter will be devoted to a coverage of wood products that, in the majority of cases, require the use of or duplicate many of the same techniques discussed in the previous part. Each article in this section is illustrated and contains a brief description of the product. Since many of the procedures have previously been described in detail, only a simple outline of the construction processes is given.

CELLARET

Figure 2B - 1. Cellaret.

A used television cabinet is converted to the cellaret exterior, and its interior is designed and constructed to fulfill a functional purpose. The two sliding shelves and drawer provide an adequate and attractive storage space for glasses, beverages, and accessories. However, differences in television cabinets demand custom production techniques for each cellaret.

Size — Varies

Material — Varies

Construction Procedure —

1. The interior of the television cabinet must be prepared for the cellaret construction by removing all electronic equipment.

2. To make the cellaret interior more attractive, it is lined with 1/4″ plywood veneer. The wood is cut and squared on the circular saw and then glued to the inside face of the cabinet sides and back.
3. Four sliding shelf tracks are cut and screwed to the sides of the cellaret. See Diagram IV for an illustration of this track.
4. A square piece of 3/8″ plywood veneer is used for the base of the sliding shelves. A face is added to the shelves to provide additional strength and a means of gripping them when opening and closing. This face is squared and shaped on the circular saw, band saw, and belt sander.
5. A drawer is constructed for the lower portion of the cellaret. The sides, front, back, and bottom are all cut on the circular saw and assembled with glue and nails.
6. All the newly constructed parts of the cellaret are sanded and finished to match the exterior finish of the television cabinet. If it is desired, the complete cabinet can be refinished.

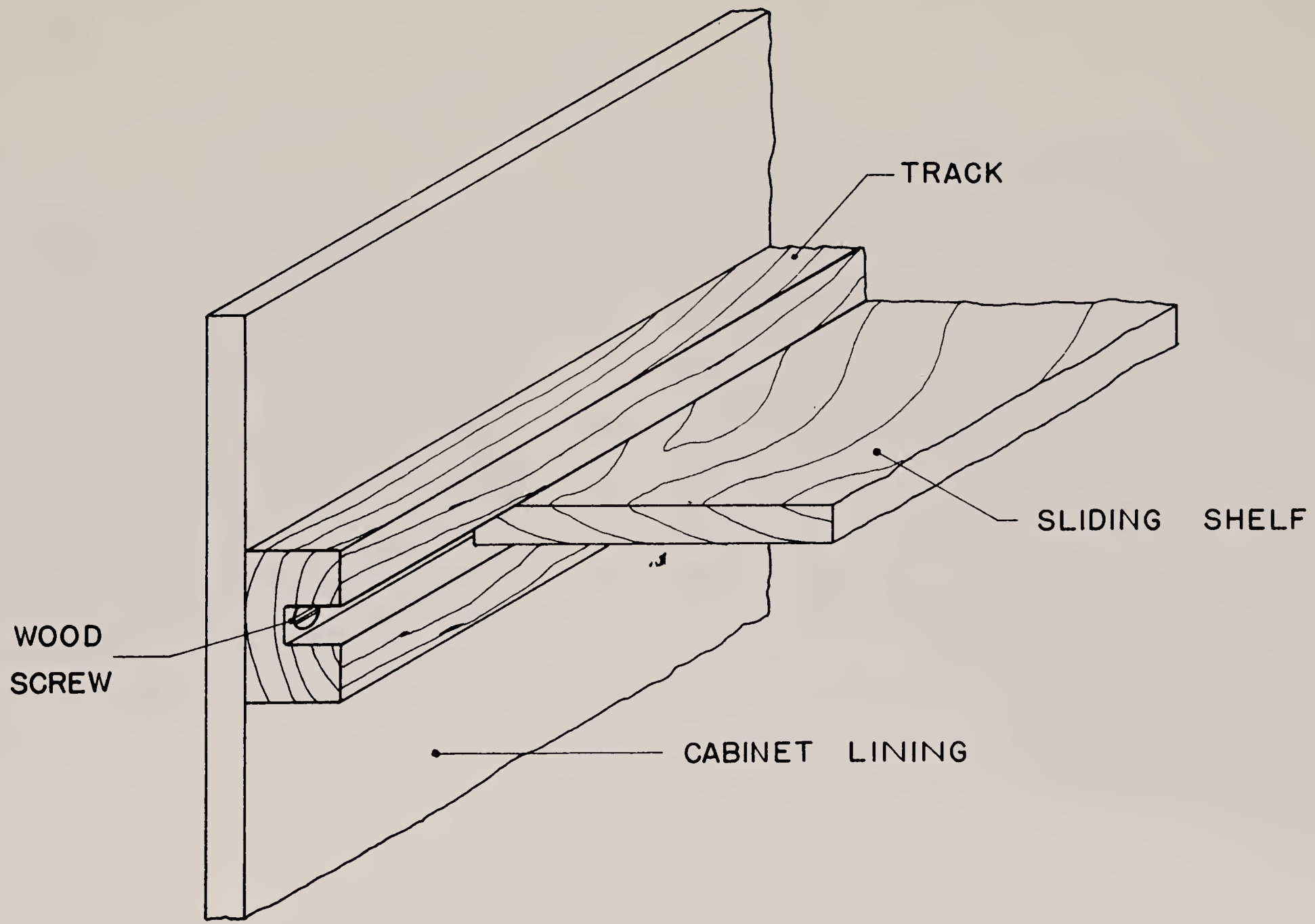
TRACK
SLIDING SHELF
WOOD
SCREW
CABINET LINING

COOKIE DISH

Figure 2B - 2. Cookie Dish.

This flat dish is used primarily for cookies, but it can serve as a tray for other items. Simple in design, it is unique because of the difficult construction techniques employed in its manufacture. The cookie dish is custom produced on the lathe.

Size — 9″ Diameter x 7/8″ Thickness

Material — Philippine Mahogany

Construction Procedure —

1. Select and cut the desired stock. Mount a screw center face plate on the top side of the dish.

Figure 2B - 3. Using a Fly Cutter on a Bed Lathe. The diameter of the dish foot and the fly cutter radius is determined by the size of the split chuck to be used.

2. Using a fly cutter in the tail stock, cut a 3/16″ deep groove in the stock approximately 4 1/2″ in diameter. (See Figure 2B-3.) Remove the fly cutter from the tail stock and insert the tail stock center blocking to bear against the bottom of the dish. (See Appendix A-5.) Cut the bottom and edge of the dish to the desired shape.
3. Remove the tail stock pressure and hollow out the foot of the dish.
4. Place the foot of the dish on a split chuck and shape the top side of the dish. (See Figure 2B-4.) Again be sure to use the tail stock center blocking against the inside of the dish to hold the work while turning.

Figure 2B - 4. Split Chuck Lathe Turning. Mount the stock on the split chuck by placing the foot against one part of the metal chuck and snapping it flush against its edge.

5. Sand and finish the cookie dish with lacquer.

CANDLE HOLDER

Figure 2B - 5. Candle Holder.

Since candle holders are used in pairs, this product is mass produced to insure proper matching. By varying the cutting template, the design of the holder (length and pattern) can be changed. Made entirely on the lathe, the candle holder makes an attractive base for a decorative candle.

Size — Base — 6″ Diameter x 7/8″ Thickness
Holder — 1 1/2″ Diameter x 8″ Height

Material — Philippine Mahogany

Construction Procedure —

1. The base of the candle holder is made on the lathe using a screw center face plate. This turning procedure is described in Appendix A-5.
2. The vertical portion or holder is produced on the lathe using the turning-between-centers techniques and the lathe duplicator. The same procedure for this article was used for making the gavel and block.
3. Once the two pieces are cut and shaped, they are fastened together by using a screw and glue. The screw is located through a hole in the base and into the bottom of the holder.
4. The candle holder is finished with lacquer.

CANDY BOWL AND LID

Figure 2B - 6. Candy Bowl and Lid.

A convenient and useful article in the home, the candy bowl is custom produced, since each should have its own distinct shape. It lends itself especially well to the creativeness of the craftsman who constructs it. The design can be enhanced by gluing several pieces of wood together to accent the changing grain patterns.

Size — 6 1/2″ Diameter x 5″ Height

Material — Philippine Mahogany

Construction Procedure —

1. Cut and glue-up the selected stock for the bowl. (See Appendix A-1.) After the square stock is glued and dried, cut the stock with the circle cutter on the band saw.
2. Mount a four screw face plate to the top of the bowl. Shape the bottom and outside of the bowl.
3. Reverse the stock and mount a screw center face plate on the bottom of the bowl. Drill a large diameter hole (approximately 2″) in the top of the bowl to the desired depth. Turn and shape the inside of the bowl using round-nosed cutting tools.
4. Mount a screw center face plate to the stock for the lid. Shape the bottom of the lid to fit the opening of the bowl. Reverse the stock to shape the outside of the lid.
5. Shape a handle using a screw center face plate. Mount the handle using a screw through the bottom of the lid.
6. Finish the candy bowl and lid with a lacquer finish.

CIGARETTE CONTAINER

Figure 2B - 7. Cigarette Container.

Made for the storage of cigarettes, this container is both functional and decorative. Custom produced, the product requires the use of several lathe construction techniques needed for making an accurate fit between the lid and bottom.

Size — 2 3/4″ Diameter x 5″ Height

Material — Philippine Mahogany

Construction Procedure —

1. Mount a screw center face plate to the selected stock for the bottom of the container.

Figure 2B - 8. Inside Chuck Lathe Turning. Sandpaper can be glued or simply placed around the inside chuck to provide additional holding pressure between the stock and chuck.

2. Using a drill chuck and a 1 3/4″ drill in the tail stock of the lathe, drill a hole into the top of the stock to the correct depth. The depth is determined by the size of a cigarette.
3. Remove the stock from the face plate and place it over an inside chuck. (See Figure 2B-8.) Turn the outside of the container and remove the screw hole from the face plate.
4. Drill a 2″ hole approximately 1/2 the thickness of the stock selected for the lid. This operation is completed on the drill press. This hole is slightly larger than the top of the container.
5. Mount a screw center face plate to the bottom side of the lid. With tail stock pressure applied to the stock, shape the outside of the lid.
6. Sand and finish the container and lid by using a lacquer finish.

BREAD DISH

Figure 2B - 9. Bread Dish.

Oblong in shape and lightweight in appearance, this dish is used to serve rolls and other breads. Turned as a regular circle on the lathe, the final shape is obtained by employing a template and the band saw.

Size — 11 1/2″ Length x 8″ Width x 7/8″ Thickness

Material — Philippine Mahogany

Construction Procedure —

1. Mount a screw center face plate on the top side of the rough stock. Shape the bottom of the dish using the fly cutter in the same procedure as employed for the cookie dish.
2. Using the split chuck and tail stock blocking, shape the dish to the regular round pattern. *Do not complete* the top of the dish at this time.
3. Match an oblong template to the top side of the dish using the centers of each as a guide. Tack the template to the dish and cut the shape on the band saw. Make sure the template is placed so the grain runs the long way of the dish.
4. Mount the stock again on the split chuck and finish cutting the top of the dish. This will remove the tack holes made when attaching the template.
5. Apply a lacquer finish after sanding the product.

CRADLE PLANTER

Figure 2B - 10. Cradle Planter.

Used for both flowers or plants, this wood article provides an added decorative appearance to a floral arrangement. Its simple construction and use of templates make it easy to mass produce. This same design can be used to make larger cradle planters for outside use.

Size — 14″ Length x 6″ Width x 6″ Height

Material — Philippine Mahogany

Construction Procedure —

1. Select 3/8″ thick stock for the sides and smooth one edge on the jointer.
2. Tack the cradle side template to the two side pieces of stock, aligning the straight edges. Cut the pattern on the band saw.
3. After selecting and squaring the 3/8″ thick stock for the cradle ends, cut a groove on the inside face of the wood to receive the bottom slats. This operation is done on the circular saw.
4. Tack the end templates to the stock, making sure the grooves are matching. Cut the two ends on the band saw.
5. Cut the 1/4″ thick bottom slats on the circular saw by ripping each slat from a large piece of previously squared stock. This will make all the slats the same width, length, and thickness.
6. Assemble the cradle using brads and glue. File and sand the edges round before applying a varnish finish.

DUPLICATION JOBS

Figure 2B - 11. Duplication Jobs.

Often, broken or damaged parts of furniture need to be replaced. When this occurs, it is the task of a craftsman to construct an object that is identical to an original. The table leg illustrated here is just one duplication job which requires lathe turning techniques.

Size — Varies

Material — Varies

Construction Procedure —

1. Select the desired stock by matching the species and size of the original wood object.
2. If possible, the original item should be cut or ripped at its center line. This will provide valuable dimensions and an excellent template from which the duplicate can be constructed.
3. After preparing the stock for turning between centers and mounting it on the lathe, the length and curves of the article being duplicated are scribed on the wood. With the proper lathe cutting tool, the rough shape is cut. A set of dividers or calipers can be used to obtain the correct thickness or diameter from the original stock. These dimensions can then be transferred to the stock being cut. In some cases, the template obtained from the original stock is placed next to the turning to determine the needed sizes. By cautiously cutting the stock and constantly checking dimensions, the exact shape can be developed.
4. After the object has been completely shaped and sanded, it must be finished with the same material used on the original product.

FRUIT BOWL

Figure 2B - 12. Fruit Bowl.

A custom produced product, the fruit bowl can be constructed with or without a scalloped edge, depending on the appearance or style desired.

Size — 12″ Diameter x 2″ Thickness

Material — Philippine Mahogany

Construction Procedure —

1. Cut a circle from a selected piece of stock on the band saw. Glue to the center of this stock a 6″ diameter block after it has been cut on the band saw. Locate the centers of the two circles by drilling a small hole through the center of the smaller piece of stock. Place a nail in that hole and into the pre-punched center hole of the larger block.
2. Mount a four screw face plate to the bottom of the bowl and turn the complete outside shape of the bowl.
3. If a scalloped edge is desired, use the same technique as described for scalloping the edge of the lazy-susan.
4. Sand the bowl following the scalloping and finish with several coats of lacquer.

GOBLET

Figure 2B - 13. Goblet.

Manufactured with a variety of exterior designs, this lathe turned article is custom constructed. Depending on the appearance or style desired, it could fulfill a functional or decorative use.

Size — 3 1/2″ Diameter x 7 1/2″ Height

Material — African Mahogany

Construction Procedure —

1. Select and cut stock to the desired size in preparation for mounting a screw center face plate. (See Appendix A-5.)
2. Mount the face plate to the top portion of the goblet and shape the exterior, both side and bottom *except the stem.*
3. Reverse the goblet on the face plate and drill a 2″ diameter hole to the desired depth in the top to form the inside shape. Finish shaping the inside of the goblet using round-nose turning tools. Before removing the stock from the face plate, finish shaping the stem.
4. Sand and finish the goblet using the lacquer finish described in Appendix A-9.
5. Attach a metal washer to the base of the goblet in the hole from the screw center face plate. The metal washer will serve as a counter-weight to add stability.

HUTCH

Figure 2B - 14. Hutch.

The custom production of this functional piece of furniture allows the craftsman to vary its size and design in accordance to the aesthetic appearance desired. The use of templates make it possible to cut and simulate the curved shapes and patterns of the Early American style.

Size — 66″ Height x 14″ Width x 10″ Depth

Material — Yellow Pine

Construction Procedure —

1. Select and square the stock for the side pieces. Cut the large curved shapes on the band saw after the small diameter corners are cut on the drill press. (See Appendix A-3.)
2. Square and then cut the curved edge for the three shelves. Use a template to obtain the correct pattern.
3. The top of the hutch is simply a piece of stock squared on the circular saw.
4. Using the same procedure for cutting the three shelves, cut and shape the top and bottom of the cupboard. The door is cut on the circular saw. The scribed pattern on the door face is cut with a scratch awl and a template.
5. After squaring two pieces of stock to the correct size, cut the curved shape of the top and bottom apron on the band saw. Again, pre-drill all small curves on the drill press.

6. A piece of 1/4″ plywood is used for the back. This is squared to size on the circular saw.
7. All edges of the cut and shaped stock must be properly rounded. Use a spoke shave for this operation and then sand all surfaces and edges.
8. Using the center line technique for the hanging shelves, the hutch is assembled using screws and glue. The screws are counter-bored at a 45° angle through the shelves into the side piece.
9. A varnish finish is applied to the assembled hutch.

MALLET

Figure 2B - 15. Mallet.

Produced for use as a tool in building wood and other type objects, this functional article was originally constructed for a local boat building firm.

Size — Head — 3″ Diameter x 8″ Length
Handle — 1 1/4″ Diameter x 14″ Length

Material — White Oak

Construction Procedure —

1. Select and prepare the stock for the mallet head. Cut and shape the cylinder on the lathe between centers. (See Appendix A-7.)
2. Sand the cylinder on the lathe and ends on a belt sander to remove the lathe center marks.
3. Using a V block and the drill press, drill a 7/8″ hole through the side of the head.
4. The handle is turned on the lathe using the lathe duplicator. (See the procedure used for constructing the gavel and block.)
5. On the band saw, cut a 1/8″ V slot approximately 1/2″ deep in the end of the handle to accept a wedge to hold the head securely to the handle when assembled.
6. Assemble the head and handle using some glue and a 1/8″ wedge.
7. No finish is required.

OFFERING PLATE

Figure 2B - 16. Offering Plate.

The offering plate is a custom produced article that serves a functional purpose for those interested in having an attractive wood turning. The plate can be finished with or without the center paper symbol or it can be completed with a felt covering.

Size — 14″ Diameter x 2″ Thickness

Material — Philippine Mahogany

Construction Procedure —

1. Select the stock needed to turn the plate and mount a four screw face plate to its bottom. (See Appendix A-6.) Shape the complete plate to the desired design.
2. Sand the plate while on the lathe and use a lacquer finish.
3. Glue the paper symbol or felt pad to the plate if desired.

STEREO CABINET

Figure 2B - 17. Stereo Cabinet.

The stereo cabinet was designed and constructed to accommodate a stereo, stereo speakers, radio, and records. The custom production allowed the cabinet to be built to the exact size needed for each particular component. Its attractiveness is equalled by its utility as an audio console.

Size — 48″ Height x 48″ Width x 22″ Depth

Material — Plywood Veneer and Philippine Mahogany

Construction Procedure —

1. The top, bottom, middle shelf, and two sides of the cabinet are cut and squared from 1/2″ thick plywood stock. A 3/8″ deep dado joint is used for the joint between the sides and the top, while a simple butt joint fastened the bottom and middle shelf to the sides.
2. A square piece of 1/4″ thick plywood is used for the back. This is tacked to the assembled cabinet frame.
3. Two doors are constructed by gluing 5/8″ thick stock together. After this operation, the material is squared to the proper size.
4. The apron, record holders, sliding stereo shelf, and radio shelf are constructed and assembled to the cabinet. The circular and band saws are primarily used to complete these construction processes.
5. A varnish finish is applied to the cabinet after it is completely assembled and sanded.

CANDY PLATE

Figure 2B - 18. Candy Plate.

This simply designed plate can serve a household in a variety of ways. Easy to turn on the lathe, it can be custom produced with different shapes and sizes, depending on the design.

Size — 8″ Diameter x 3/4″ Thickness

Material — Philippine Mahogany

Construction Procedure —

1. The dish is turned on the lathe using a screw center face plate. The bottom is first shaped, then reversed to shape the top. (See Appendix A-5.)
2. The knob is a screw center face plate turning and is mounted to the dish with a screw through the bottom of the plate.
3. A lacquer finish is used.

FLAG POLES

Figure 2B - 19. Flag Poles.

Flag poles are mass produced, on the lathe using a duplicator, for a local boat building company. The size and style of the boats for which they are used determines the flag pole length, ranging from 18″ to 48″.

Size — Varies

Material — Philippine Mahogany

Construction Procedure —

1. The stock for the flag poles is prepared in accordance to the outline described in Appendix A-7. A separate lathe duplicator is mounted on the lathe for each particular size pole to be turned, since the matrix on the duplicator determines the shape to be cut. The mounting and locating of the duplicator is identical to the procedure used for the gavel and block duplicator.
2. After the stock and duplicator are mounted, the pole can be turned. When turning any pole other than the 48″ length, the left hand is used as a steady rest during the cutting procedure. (See Figure 2B-20.) For the 48″ pole, a 3″ long section in the middle of the pole length is cut to the true diameter. A steady rest is located at this position to prevent excessive vibration of the stock. After the steady rest is in place, the remaining portion of the stock can be turned to size.

Figure 2B - 20. Supporting Stock While Lathe Turning. When using the left hand as a steady rest, place a small piece of approximately 1/8″ thick leather about the stock to prevent unnecessary burning of the hand.

3. After the lathe duplicator cutting tool has shaped the stock and the duplicator is removed, the stock can be smoothed using a small hand plane while the lathe turns the wood.
4. After the stock has been sanded, it is necessary to remove the waste stock at the top end of the pole. This is achieved by using the small key hole saw and the same procedure as employed for the gavel and block. (See Figure 2B-21) for an illustration of removing the waste stock.

Figure 2B - 21. Removing the Waste Stock from a Lathe Turning. Pressure is applied with the left hand toward the headstock — the right hand forces the saw into the rotating stock.

5. Since the flag poles will have contact with water, spar varnish finish is used. See Appendix A-9 for the finishing procedure.

CHAPTER III

TOOLS AND EQUIPMENT

Special Construction Devices

In the manufacture of wood products, a visually handicapped craftsman must rely on a variety of construction techniques. These cutting, shaping, assemblying, and other procedures mandate the use of woodworking tools that simplify and make the techniques possible to complete. Although a wide range of basic hand woodworking tools are employed by Mr. Lalli, special devices had to be developed to fit his personal needs. More often than not, many commercially purchased tools were not available or adaptable to his specific products and their construction methods. The professional quality of Mr. Lalli's wood articles are a result of his ingenuity to create and use such special construction devices.

No detailed explanatory description has yet been made of the construction devices mentioned in Chapter II and the Appendix. The purpose in providing this information in Chapter III is twofold. It is hoped that the verbal and illustrative contents will provide an explanation of size, materials, and other characteristics of these devices. This in turn should help clarify the written construction procedures.

Secondly, and most important, these same devices can aid other blind craftsmen and help to increase their woodworking proficiency. This can occur by directly copying these devices for use on similar products, or by altering them to fit other individual needs. Exposure to the features and characteristics incorporated in Mr. Lalli's devices might even lead to the creation of completely new and different devices. Special construction devices do not need to be limited to the blind, for conceivably, the sighted could also simplify the manufacturing task with their usage.

Figure 3 - 1. Centering Disc Set. Plywood or pressed wood discs with center holes are used for locating center of stock to be turned or cut round.

Centering Disc Set — These center finding discs are made of 1/4″ thick plywood. Cut and shaped on the band saw circle cutter, the discs range in size from 2″ to 12″ in diameter, increasing at 1/2″ increments. A large hole (approximately 3/4″ diameter) is drilled through the discs to make it possible to hang them on a metal holder. (See Figure 3-1.)

Centering Pin — An 8d common nail is pointed on a grinder to form the marking pin. To help the craftsman hold and position the pin, a 1/2″ thick x 2″ diameter wood disc is placed about the metal pin. Use a drill, slightly smaller than the nail diameter, to bore the hole in the disc. This provides a press fit between the two and prevents the pin from being removed. (See Figure A-7.)

Centering Bolt — A steel bolt, with a thread to match the 1″ #8 N.C. inside thread of a four screw face plate, is used. On one end of the bolt, a 1/2″ long point is shaped using the grinder. Figure A-10 provides an illustration of the bolt.

Lathe Cutting Tools — Although standard lathe turning tools are acceptable for use by the blind, these specially made tools offer two distinct advantages. Since a blind craftsman should hold the cutting tool in one hand and under the same arm against the side of the body (for additional steadiness and control), it is important that the tool have an adequate length of approximately 18″ - 24″. Most commercial lathe cutting tools are too short for this type of holding technique. By using the tools illustrated in Figure 3-2, the craftsman is allowed to have a larger variety of cutters. Bits that can be removed or changed can be attached at each end of the steel bar handles. Those who are unable to sharpen their own cutting tools can simply replace a dull bit with a sharp one, and continue working. *Small Round Nose Cutting Tool* — A 3/4″ square steel bar is used for the handle of this tool. A square hole and lock-set screw at each end of the handle accommodates a cutting bit. The bits for this particular tool are made from the same type of material used to make metal lathe cutting bits. *Large Round Nose, Left,* and *Right Diagonal Cutting Tools* — The handles for

Figure 3 - 2. Lathe Cutting Tools. Illustrated from top to bottom are: Large Round Nose, Small Round Nose, and Left and Right Diagonal cutting tools.

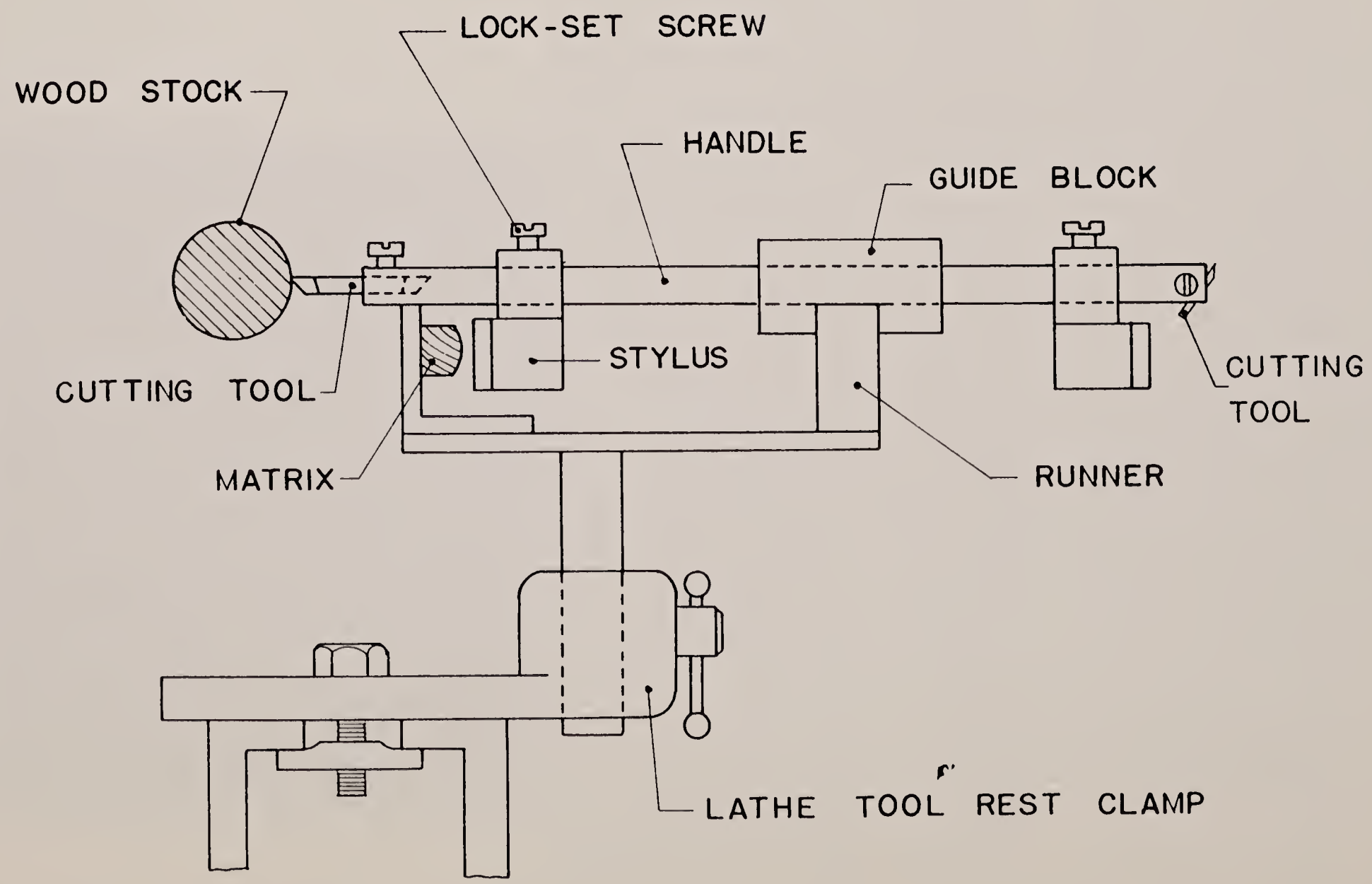

PATENT No. 3,277,933

these cutters are made from a 1/4″ x 1″ bar strap. A short curved steel clamp and screw fasten the high speed steel bits to the handles. Each bit is shaped to the desired angle or curve.

Lathe Duplicator — The lathe duplicator is a device made of metal and wood that cuts an infinite number of identical wood objects. (See Diagram II.) Different wood matrixes (profile shape of an object) can be fastened to the matrix holder and parallel to the wood stock. The wood guide block slides along the wood runner, keeping the cutting tool perpendicular to the stock. The cutting tool slides through the guide block and is regulated by the stylus hitting the matrix. Except for its size, the cutting tool on the duplicator is identical to the small round nose lathe cutting tool. Diagram V shows the duplicator and its important components.

Lathe Tail Stock — This special tail stock is used in conjunction with a headstock lathe. The drill chuck is made by fastening a small pulley (with a 3/8″ diameter center bore and an Allen head set screw) to the vertical plywood frame. The center of the pulley bore is located directly in reference to the center of the lathe live center. (See Figure 2A-7.) pg. 12.

Lathe Split Chuck — To form the base of the split chuck, a small four screw face plate is mounted to two pieces of 3/4″ thick x 5″ diameter plywood discs. The bottom section of a heavy gauge steel container is fastened on the opposite side of the plywood to hold the stock when turning. Be sure to cut four slits in the edge of the container — it will expand slightly when the stock is placed in it. (See Figure 2B-4.) pg. 43.

Inside Chuck — A cylindrical shaped block of wood is mounted to a small screw center face plate. The diameter of the cylinder is determined by the dimension of the interior of the object to be turned. Glue several pieces of sandpaper to the inside chuck to help improve the friction joint between it and the stock being held. See Figure 2B-8 for an illustration of the inside chuck and its use.

Band Saw Cutting Guide — Clamped to the band saw table, this aluminum cutting guide permits the craftsman to make a straight cut without using a band saw miter gauge. A small (approximately 1/4″) perpendicular lip is formed on one end of the guide to provide a track for the stock to follow. (See Figure 2A-11.) pg. 17.

Circle Cutter — A 3/4″ thick plywood table is used for the base of the circle cutter. When properly located, this is clamped to the regular band saw table. The groove in the base provides a track for the brass pivot pin to slide. The position of the pin is determined by the radius of the circle being cut. A wing-nut is used to secure the pivot pin to the base. (See Diagram VI.) The overall dimension of the circle cutter is 12″ wide x 27″ long.

Drill Jig Guides — The "T" shaped jig is used to locate holes to be drilled in the end of wood stock. Made from scrap wood of the same thickness as the working stock, the two pieces are assembled using a lap joint. The pre-drilled holes guide a forstner bit during the drilling operation. A sketch of this jig is shown in Diagram VII. Another type drill jig guide is made from a small piece of maple. Two box nails are located in holes bored through the jig. The function of these nails is to mark the centers of holes to be drilled in a piece of stock. (See Figure 2A-16.) pg. 23.

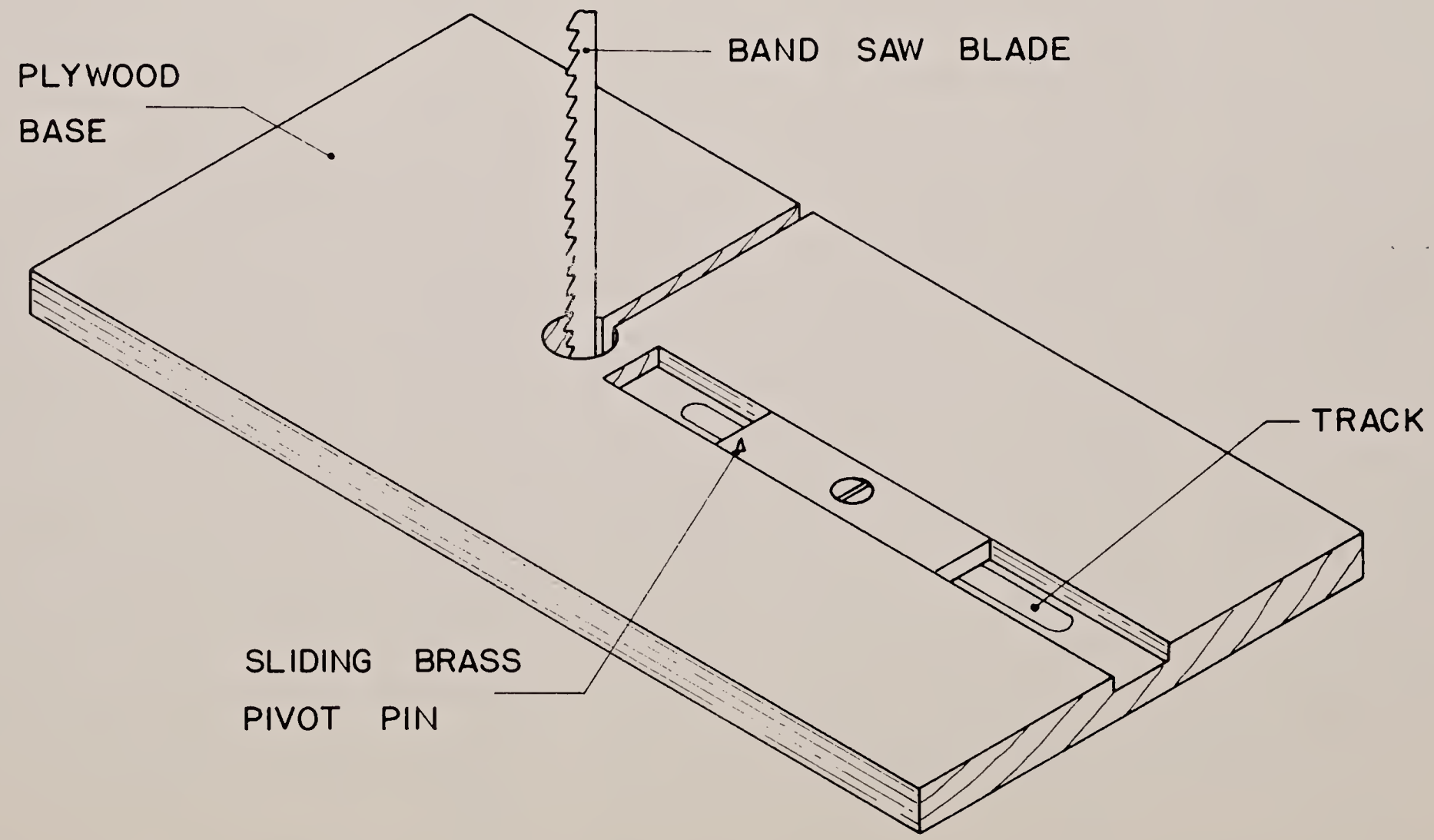
PLYWOOD
BASE
BAND SAW BLADE
TRACK
SLIDING BRASS
PIVOT PIN

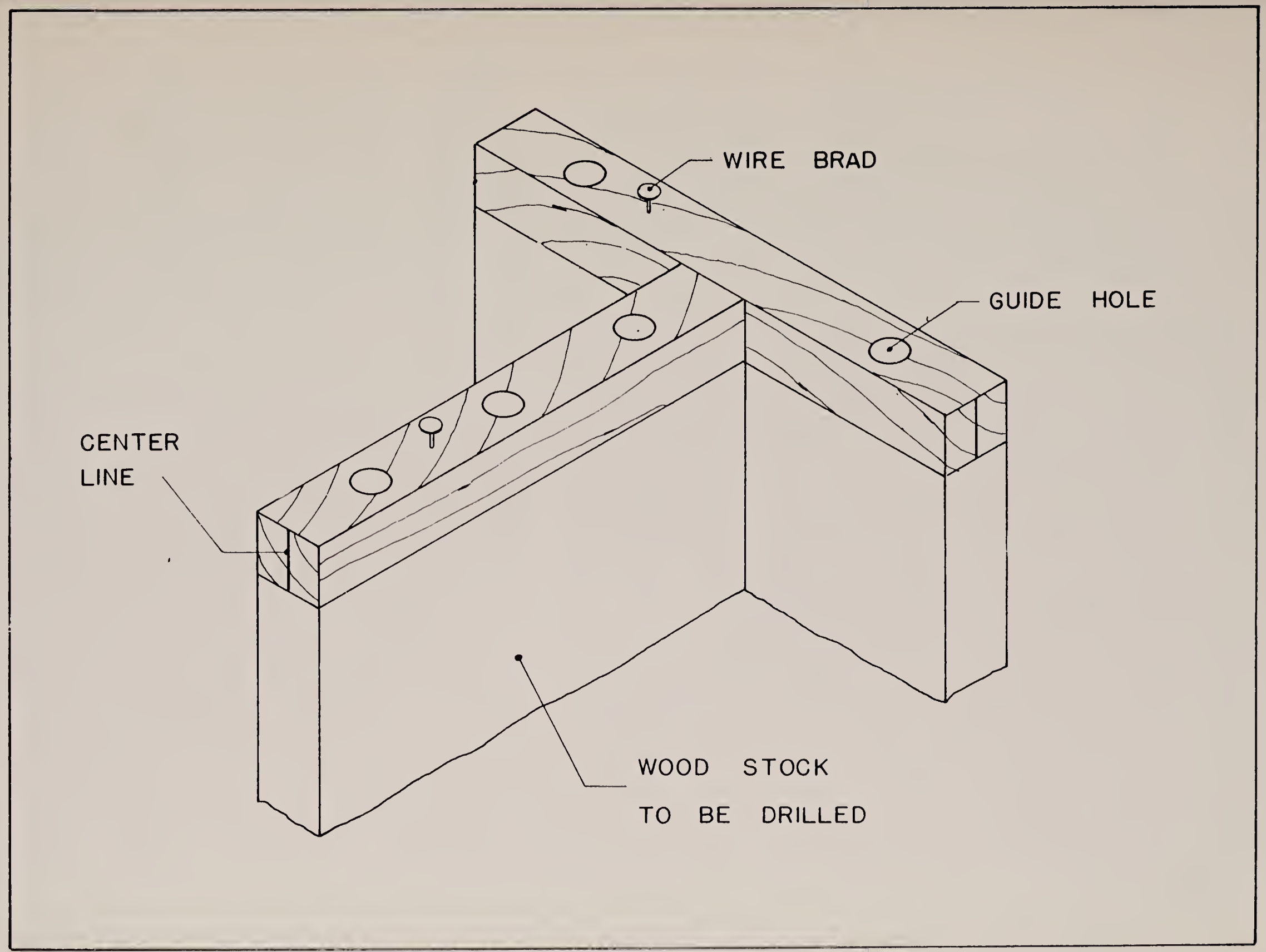
WIRE BRAD
GUIDE HOLE
CENTER
LINE
WOOD STOCK
TO BE DRILLED

Early American Table Leg Vise — Two pieces of squared plywood and two machine bolts with wing-nuts constitute this vise. Legs are added to the outside of each jaw to help support it and the wood stock being drilled. (See Figure 2A-17.)

V Block for Drilling — The V block is formed by two wedge shaped (equiangular triangles) wood strips fastened to a wood base. These two wedges are lined with a piece of aluminum bent identically to the pattern of the "V" slot. The base is secured to the drill press table top with two bolts and wing-nuts. A pointed steel rod is placed in the drill press chuck to center the V block directly below the drill. A small block of wood with a hole bored through it can serve as a centering jig when positioning the stock in the V block. An illustration of the use of this device is shown in Figure 2A-21.) pg. 33.

Scalloping Device — The scalloping device consists of a base, stylus, pivot hole, and matrix with a guide pin. A stylus is attached to the front edge of the 1/2″ thick x 3″ wide wood base. This stylus is positioned directly in reference to the adjustable brass pivot hole, when the base is secured to the drill press table top. The brass guide pin, located in the center of the 1/2″ thick plywood matrix, is placed in the pivot hole when properly assembled. The complete scalloping device location is determined by setting the outside edge of the stock (fastened to the matrix) against the router bit held in the drill press chuck and the matrix edge against the stylus. (See Diagram VIII.)

Lazy-Susan Assembly Locators — Both locators used to position the separate parts of the lazy-susan during the assembly procedure are made of wood. A nail is placed through the center of the wedge shaped locator and projects (approximately 1/2″) beyond its edge. This positions the ball-bearing unit on the base, using the center hole drilled through the base as a guide. (See Figure 2A-5.) The second locator has a nail placed through the center of the 3/4″ thick x 2 1/2″ diameter wood disc. This nail extends 2″ past the edge of the disc. This positions the lazy-susan first dish and pedestal on the base. See Figure 2A-9.) pg. 14.

45°, 60°, and 90° Jointer Gauges — These metal gauges are helpful in setting the correct angle between the jointer fence and in-feed table. A large squared block of wood helps position the gauge as it keeps the gauge perpendicular. If the gauges are not properly placed, an inaccurate angle will result. Figure A-1 pg. 72 illustrates the use of the 45° jointer gauge.

Band Saw Blade Guide — Attached directly to the band saw, this guide is placed in front of the blade. The pointer allows the craftsman to place his finger at the blade to control the movement of the curved pattern being cut. Shaped from a piece of aluminum, the pointer extends beyond the guard to the top of the stock. This prevents any contact with the blade. The guide is shown attached to the band saw in Figure A-6. It is possible to purchase a band saw blade guide from the American Foundation for the Blind.

Early American Table Pedestal Triangles — Two equiangular triangles are cut from 1/4″ thick plywood to form this device. A drilled center hole and round head wood screw provides a means of fastening the triangles to the ends of the pedestal. (See Figure 2A-15.) pg. 23.

Fluting Tools — The edge fluting tool is simply made from a 3″ diameter wood disc and a flat head wood screw. To provide a sharp cutting edge, half the screw head is removed. The screw is positioned in the center of the disc.

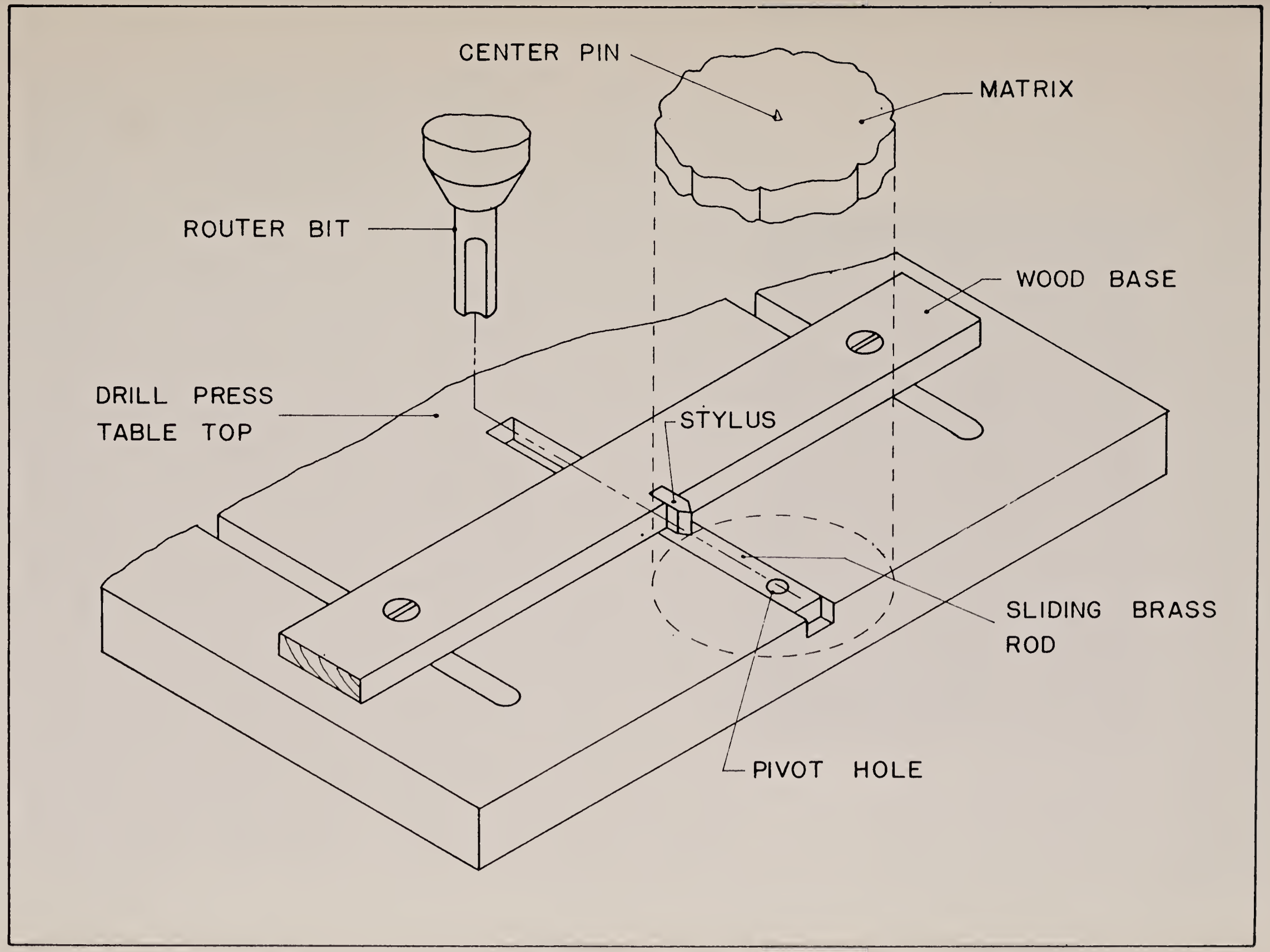
CENTER PIN
MATRIX
ROUTER BIT
WOOD BASE
DRILL PRESS
TABLE TOP
STYLUS
SLIDING BRASS
ROD
PIVOT HOLE

Sanding Sticks — Several differently shaped (cross section) sticks can be made for sanding a variety of curved or flat patterns. At the opposite end of the handle, a groove is cut through the stick. This provides a means of mounting the sandpaper, for the wedging pressure from the expanding groove secures it to the stick. (See Figure 3-3.)

Figure 3 - 3. Sand Sticks. Shown along with the round and rectangle sanding sticks is a spoke-shave, often used with the sticks for final smoothing operations.

A steel cutter is located in the center of the wood handle on the center fluting tool. The depth of the groove is determined by the concave shape of the cutter, while the handle centers it in the edge of the stock. See Figure 2A-18 for an illustration of both fluting tools.

Center Line Scriber — Small 90° shaped pieces of steel form the two parallel runners. Three steel straps connect these runners, and a pivoting joint is used at all six connecting points. A 1/8″ deep pin is placed on the bottom side of the middle strap. This is located at the center to assure that it always scribes a center line on any sized stock. Diagram I, page 5, illustrates the use of the center line scriber.

Templates — Many construction techniques rely on the use of a template to determine the shape or size of the object. Templates make certain procedures possible for the blind and those who would otherwise be unable to operate the needed equipment. For example, cutting curves on the band saw would be very difficult and dangerous without a template to guide the stock into the blade. Since the variety is large, only one template is illustrated in Figure A-6. This 1/4″ thick plywood template was originally cut on the band saw by a sighted person, who used a scribed line to form the correct pattern. The template is attached to stock to be cut with 2 or 3 small brads.

Power Equipment

The detailed construction procedure of Mr. Lalli's wood products has illustrated the large reliance placed upon power equipment. To many persons, this is a startling fact. It is often believed that the use of power equipment is too dangerous for blind craftsmen. Surprisingly, blind woodworkers constructing

any type of article have a greater need for power equipment than sighted individuals. Since the accurate manufacturing of products primarily with hand tools is difficult even for a skilled sighted craftsman, a blind person would certainly encounter more obstacles. If a blind craftsman hopes to construct professional products that can compete with commercial articles, professional power equipment is necessary.

Power equipment does not completely eliminate the need for basic hand tools. Many construction operations are completed entirely by use of a hand tool or special construction device. However, it should be remembered that whenever power equipment can replace the use of hand tools, the craftsman will benefit immensely. Power equipment is often easier to oprate than hand tools, and permits the making of precise measurements, shapes, and other cuts. With the proper instruction and working techniques, an extensive range of construction operations becomes possible.

It is not mandatory that a home shop be outfitted with a large variety of power equipment. Certain specific pieces of equipment will serve most of the craftsman's needs. The following list of equipment is considered basic for such a shop:

Jointer	Pedestal Drill Press
Circular Saw	Combination Power Sander
Band Saw	Portable Orbital Sander
Bed Lathe	Head Stock Lathe

Two other pieces of equipment that also help improve the construction area are a work bench and a portable table. The latter, with a set of casters, can be pushed about the shop and used near the other power equipment. This provides a good working surface and helps decrease excessive movement by the craftsman.

Tool and Equipment Maintenance

All mechanical devices are subject to a certain amount of depreciation resulting from their constant usage. The break-down of tools and equipment causes a severe handicap for the blind craftsman, since locating and repairing such problems are difficult without visual guidance. In the majority of cases, it is best to call upon professional repairmen who have the expert skills to undertake such tasks. This same type of situation exists for sharpening tools and equipment. The sharpening of saw blades, jointer blades, and other cutting tools is best achieved by a professional, thereby assuring a proper sharpening. However, a blind craftsman can lengthen the "life" of most tools by honing the cutting blade with a small whetstone before each usage. Preventive maintenance is just as important, if not more so, to the blind craftsman, than for the sighted.

Associated with tool and equipment maintenance is the placement of such devices within the layout of the shop. No one particular system is recommended, but a definite need exists for the blind to have a controllable arrangement. All items, such as tools, equipment, supplies, and materials, must have a standard and constant location. It is extremely important that everything be returned to the same location after use to avoid needless searching. This organization of equipment and benches assists in the cleaning of the shop. If a blind craftsman has someone other than himself to clean the shop, that person should be thoroughly familiar with the layout and placement of all items. For best results, the blind woodworker should accompany and help complete the cleaning operation.

CHAPTER IV

TEACHING OTHERS

Another important contribution attributed to Mr. Lalli is in the area of teaching others. Through the cooperation of the New Jersey Commission for the Blind, it has been possible for several blind students to obtain instruction in his basement shop. The prime objective of this instruction has been to provide the students with some basic knowledge of, and skill in, the safe use of woodworking tools and equipment. Familiarity with small wood products and the construction techniques employed for their manufacture was also achieved. It is hoped that this instruction has afforded a means of allowing these students to develop and continue their experiences of working with wood and related materials.

Several distinguishable reasons are evident as to why Mr. Lalli became a teacher. Outstanding among these is his personal desire to be able to help others, especially blind persons who often need a special incentive. It is the working experience with wood and tools and equipment that might become the needed motivation and inspiration. Related to this belief of helping others is the concept that a blind student can be taught as well by a skilled blind craftsman as by a skilled sighted instructor. A blind instructor often has a better understanding of the proper teaching methods and personal learning needs of the students. The opportunity afforded in being able to give others the benefit of his experiences, construction techniques and devices has added to Mr. Lalli's interest in teaching.

In most cases, he uses many of the same techniques that are employed in teaching sighted students about woodworking. The difference lies in his use of a step by step teaching approach instead of an overall general contact. The same approach is followed, no matter what the topic or related information.

The first instructional step is simply a verbal explanation which provides the student with a certain knowledge and familiarity to the subject matter. Following the initial acquaintance with the subject matter, the student is permitted to make a direct contact with it. This stage of the educational process is primarily concerned with the ability to use the senses of touch, sound, and smell, instead of sight. Through the sense of touch, the student gains a mental image of the objects and is made aware of all its characteristics. Central starting positions and standard predetermined paths of hand and body movements are a sample of what is learned. Often, to aid the learning at this point, the senses of sound and smell are incorporated. With properly operating tools and machines, the sounds and odors of the shop can be acquired.

With complete familiarity with the second stage, Mr. Lalli proceeds to personally demonstrate the instructional topic. By using the same positions and techniques employed during his normal working operations, the students are given an opportunity to observe the proper methods. This observation is in the form of touching the instructor's hands and arms, or any other important reference point. Witnessing the performance of a skilled craftsman allows the student to more easily duplicate the procedures.

Finally, the student takes the same position demonstrated by the instructor. The teacher can discover any errors and assist in their correction. Further instruction can be given verbally, or directly by guiding the student's movement.

The quality of instruction and learning can best be judged by the knowledge obtained and the tangible result. Beginning with those who lack any understanding of woodworking, Mr. Lalli gives his students abundant skills in using many tools and in constructing wood products. The elementary stages of instruction deal with lathe turning technique and associated articles and progresses through the manufacturing of small tables which require the use of power equipment.

A mutual benefit has been received by all those concerned with this teaching program. The students have gained a useful knowledge of woodworking, and Mr. Lalli has given a part of himself to others.

APPENDIX A-1

GLUING STOCK

1. All stock that will be glued needs to be cut and prepared to the desired data size or shape required. A dry assembly and tactile check of the joint must be made to assure a proper fit between the gluing surfaces.
2. Before the actual gluing operation, all the necessary equipment and supplies required to complete the process should be obtained and made available at the gluing area. Once the glue is applied, little time can be spent procuring these items.
3. When applying glue to wood surfaces, several important techniques can be followed to avoid problems. The actual application of the glue is best achieved with the use of the fingers, for it can be readily felt whether or not the surface is completely coated. This procedure also avoids the unnecessary coating of adjacent wood surfaces, as might occur when using a brush. A damp rag can be provided to clean the fingers before continuing with the operations. It is further recommended that glue always be applied to the smaller wood surface, if there is a size difference in the stock being joined. Again, this usually prevents the undesired spreading of glue on portions of the stock not to be fastened.
4. After securing the glued joint with screws, nails, or clamps, it is extremely important that the *complete* joint be wiped with a damp cloth. If necessary, repeat with another cloth. This removes any excess glue that might have seeped from the joint onto the exposed wood surfaces. Allow the glue to dry according to the manufacturer's specifications.

APPENDIX A-2

SQUARING STOCK

1. Select the desired wood in accordance to the type and size required. Check both ends of the stock tactilely for possible splits or checks.

Figure A - 1. Setting Jointer Fence to the Correct Angle. Once the jointer gauge and squared block are positioned, it is necessary to check tactilely the joint between the gauge and jointer for any openings.

2. Check the jointer to be sure the fence is set at a right angle to the table. This can be achieved by using a 90° steel corner along with a squared wood block that assures the proper placement of the steel corner. (See Figure A-1.) Other patterns can be used to set the fence for different angles such as 60° or 45°. With the in-feed table set to the correct depth, smooth one edge of the stock.
3. Check the circular saw table top to make sure it is clear of debris and all parts are secure. Cut off a 1″ scrap block on one end of the stock to check for defects in the wood unnoticed by the fingers. This operation will square one end of the stock with the jointed edge. (See Figure A-2.)

Figure A - 2. Crosscutting Stock on the Circular Saw. Always locate the thumb of the right hand on the mitre gauge back and the other fingers over it, while the left hand holds the stock against the gauge. The saw guard has been removed for illustration purposes only.

4. Measure the desired length from the previously cut end using any standard measuring device for the blind. Simply set one end of the ruler against the side of the saw blade while the other end is even with the end of the stock. See Figure A-3 for this operation. After placing the fingers in the proper position, cut the wood. When cutting other pieces of stock to the same length, set each successive piece on top of the original one cut, with the previously cut ends matching.

5. After setting the saw fence for the desired width, rip the stock. See Figure A-4 for the proper placement of the hands while ripping the stock.

Figure A - 3. Measuring Stock Lengths. Measure stock only when the blade is completely at rest. Again, keep the right hand on the mitre gauge, while the left hand measures the correct length.

Figure A - 4. Ripping Stock on the Circular Saw. Once the cut has been started, the left hand is used *along with a push stick* to move the stock into the blade. The right hand *always* remains on the end of the fence.

APPENDIX A-3

CUTTING CURVES ON THE BAND SAW

1. Tack a pre-cut template to the stock that will be cut. If the template has one straight edge, align that edge to a true edge on the stock. This is usually achieved by smoothing one edge on the jointer.
2. Using the drill press and a machine forstner bit, cut out all the small and large curves of the pattern with a drill that is similar in size to the curves. (See Figure A-5.) This avoids the cutting of these curves on the band saw.

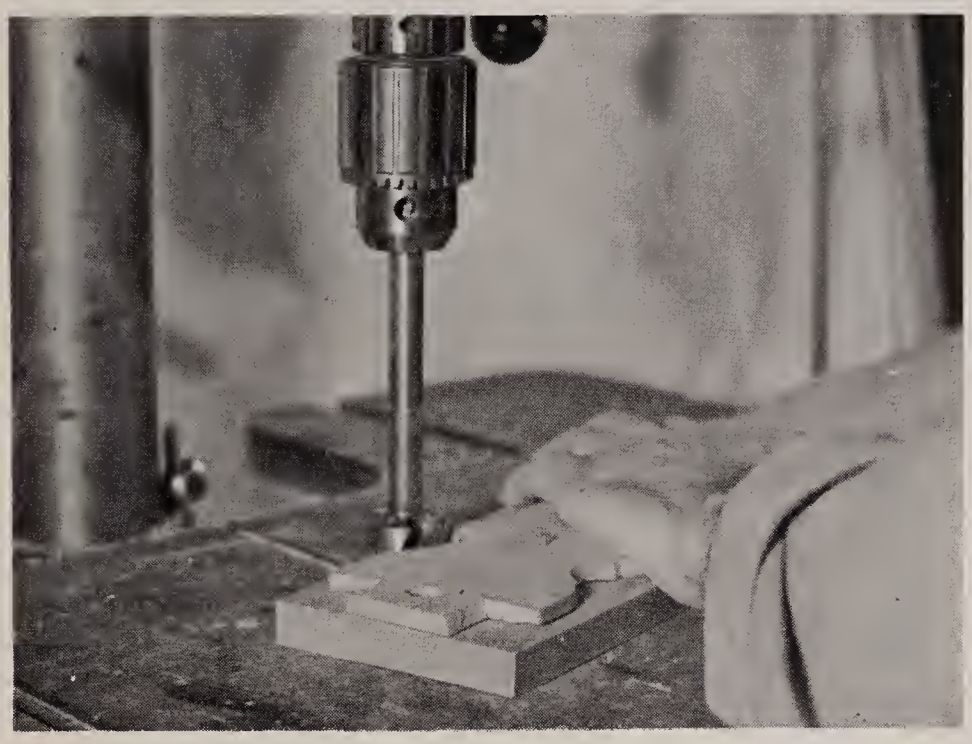

Figure A - 5. Cutting Small Curves on the Drill Press. Use can be made of a machine forstner bit to produce short radius curves. Choose a bit size which matches the template curve.

Figure A - 6. Cutting Curves on the Band Saw. Keep the heigth of the band saw blade guide as close as possible to the top of the stock and keep the portion of the curved pattern being cut parallel with the blade.

3. With a special guide on the band saw, cut the pattern by following the curved edge of the template. Be sure the fingers are located on the guide to indicate the curves as the stock moves towards the blade. All cuts must be made parallel with the blade to prevent binding between the blade, template, and stock. Figure A-6 illustrates this operation.
4. This cutting procedure results in a duplicated pattern of the template, but approximately 1/8″ larger, except at the curves that were cut on the drill press. To make the stock the same size as the template, drum sand the curved edges. When the template and stock are the same size, remove the template.

APPENDIX A-4

CUTTING CIRCLES ON THE BAND SAW

1. After selecting the desired stock, square it by first cutting a scrap block off one end. Set the saw fence to the width of the stock and cut the correct length. The result is a square block of wood with an equal width and length.
2. Locate the center of the square stock. Select from an assortment of different diameter plywood discs, one with the nearest diameter to the width and length of the stock. After properly placing the disc on the stock, a steel pin can be inserted through the center hole of the disc. A punched center hole on the stock face can be obtained by hitting the pin with a hammer. Figure A-7 shows the use of the pin and plywood disc. The center can also be located by scribing diagonals from the corners on the face of the stock. A center punch mark is made where the diagonals intersect.

Figure A - 7. Locating the Stock Center. Use a centering disc to locate center of stock. Disc does not need to be exact size of stock.

3. Using the circle cutter, cut the stock on the band saw. Place the punched center hole on the face of the stock over the pivot pin on the cutter. Adjust the location of the pin so that the edge of the stock rests against the saw blade. Rotate the stock as the blade cuts the wood making sure that the fingers are located on the stock at all times and never directly in front of the blade. See Figure A-8 for an illustration of the cutting operation.

Figure A - 8. Cutting a Circle on the Band Saw. The right hand (placed to the right of the blade) rotates the stock, while the left hand keeps stock secure on table top.

APPENDIX A-5

SCREW CENTER FACE PLATE LATHE TURNING

1. Cut the wood stock to be used for the lathe turning into a circle using the three operations outlined in Appendix A-4.
2. On the drill press, drill a small pilot hole approximately 3/32″ or 1/8″ in diameter through the center of the cut circle. Use the previously punched center hole to locate the stock in reference to the drill. This drilled center hole will receive the screw from the screw center face plate.
3. Fasten the face plate to the stock using one #10 flat head wood screw, and then mount the combination on the lathe.
4. Use tail stock blocking pressure against the stock to aid in making the wood secure during the cutting operations. Cut and sand the edge and bottom of the wood turning before reversing the stock on the face plate. (See Figure A-9.)
5. Shape the top surface of the item being turned after the reversing operation is completed. Again, use the tail stock blocking pressure against the wood. This tail stock pressure needs to be removed, however, prior to the cutting of the center portion of the object. Sand the top surface after the final shape is obtained.

Figure A - 9. Turning Stock on a Bed Lathe. Approach wood turning with the turning tool in firm contact with the tool rest, and then move it slowly into the rotating stock. Hold the cutting tool in the right hand and under the right arm against the body, while the left hand, on the top of the stock, determines the shape of the cut.

APPENDIX A-6

FOUR SCREW FACE PLATE LATHE TURNING

1. Using the three operations of Appendix A-4, cut a circle from the wood stock to be used.

Figure A - 10. Positioning a Four Screw Face Plate to the Stock. After locating the face plate to the center of the stock, mount it with four screws before removing the centering bolt.

2. Center the face plate on the wood using a special bolt that locates the face plate to the punched center hole on the stock. Figure A-10 illustrates this operation. Using a self-centering punch, punch a hole for the four face plate

screws and complete the fastening. Punch a hole with an awl in the wood stock opposite a register mark on the face plate. This allows the face plate to be removed and replaced in the proper location using the same screw holes.

3. After mounting the stock and face plate on the lathe, shape the edge and back of the item first. Using a fine and large turning tool in sequence, hold the cutter and feel the stock in the same manner that is employed for all lathe turnings.
4. Finally, shape the top side of the stock using the same cutting techniques. Again, use a larger round nose cutting tool to remove possible grooves left after the initial shaping occurs with a smaller cutter. Sand the complete object using the standard three grades of sandpaper before removing the face plate.

APPENDIX A-7

BETWEEN CENTERS LATHE TURNING

1. After selecting the desired stock, square it by following the operations outlined in Appendix A-2. Usually the wood will have a relatively small width and thickness dimension (4″ x 4″ maximum), while the length varies according to the article.
2. With the jointer fence set at a 45° angle, bevel the four sharp corners of the stock. This eliminates the possibility of having the lathe cutting tools dig into the stock with uncontrollable force, causing splintering and tearing of the stock.
3. Locate the center of each end of the wood by using a small diameter plywood disc and pin. Tap the lathe center pins into the wood with a hammer, this assures a firm grip between the centers and stock.
4. Mount and secure the stock on the lathe between centers. Since most of the turning between centers is completed by means of the lathe duplicator, set the duplicator in its correct location. This is achieved by regulating the distance the matrix or template is placed from the stock itself.
5. After the stock and duplicator are correctly positioned, the outside shape can be turned.

APPENDIX A-8

*LACQUER FINISHING

1. All wood articles must be completely hand or machine sanded before any finishing operations can begin. A good sequence of sandpaper is grits 60, 80, and 120. It is recommended that the product be thoroughly cleaned with a cloth or brush before finishing.
2. In order to reduce the finishing operations, a colored wood filler is applied. This stains and fills the wood during the same application. Be sure to follow the manufacturer's specifications at all times when using commercial products. Cheesecloth can be used to apply the creamy filler and to remove any excess when wiping against the wood grain. Allow the colored wood filler to dry thoroughly.

3. One or two coats of lacquer sealer are then applied to the product. With the sealer properly thinned with lacquer solvent, apply it using a spray gun in a well vented area. A light sanding between coats with 220 grit paper is recommended. When spraying small or lightweight objects, it is best to hold the article in one hand and spray with the other. It is easier to judge the distance between two hands than between a hand and another object. However, for large objects, the latter technique needs to be employed. In this case, move the gun in a uniform arc about the article with a steady motion.
4. Before a coat of lacquer finish is applied, another sanding with 220 grit sandpaper is necessary. The same spraying procedure is employed for the lacquer coat as for the sealer. After the final coat is dried, no further finishing is required.

*Mr. Lalli does not recommend the use of a lacquer finish by blind craftsmen because of the extreme difficulties encountered during its application.

APPENDIX A-9

VARNISH FINISHING

1. The proper sanding and cleaning is also necessary for any wood article to be finished with cabinet varnish. (See Appendix A-8.)
2. Wood stain and filler is applied in the same manner for all wood finishes. Appendix A-8 describes this operation.
3. Before the varnish finish can be applied to the article, a thin coat of shellac must be used to seal the colored wood filler. Shellac can best be applied with a soft sponge, for it permits a good even flow of liquid. After the shellac has dried for four to six hours, it is necessary to steel wool or sand the sealing coat.
4. It is recommended that varnish be applied with a sponge. By controlling the amount of liquid in the sponge, a light coat can be spread on the wood. This prevents unwanted runs due to a heavy application. Sand the dried varnish with 220 grit sandpaper between each of the two or three coats. Again, be sure to follow all specifications written by commercial manufacturers.
5. After the final coat of varnish, the finish can be hand rubbed with pumicestone and water. This improves the luster of the finish.

APPENDIX A-10

SHELLAC FINISHING

1. Although shellac is the simplest finish to apply, it is necessary to sand and prepare the wood surfaces properly before any application is made.
2. Shellac can best be applied with cheesecloth, for it permits the liquid to be administered with the hands. By regulating the amount of shellac in the cheesecloth, a thin coat can be smoothly applied.
3. A light sanding with 220 grit paper is necessary before a second or third coat of shellac is applied. Be sure to always apply a thin coat, for a heavy coat tends to run and discolor the finish.
4. Once the final coat is dry, steel wool the entire wood product. Be sure not to rub too hard, for it is poor practice to scratch through the finish coat and mar the previous coat. A good application of commercial paste wax will complete the finishing operations.

APPENDIX B

REFERENCES

The following listing of woodworking reference material makes no claim to completeness, but simply suggests several starting points for further study related to the technical information presented in this bulletin. Besides offering suggestions, this list can be used to supplement the written text and provide essential information not covered, but for a better understanding of the construction procedures. Except for one reference published in large type and Braille, it should be noted that the others are available only in the standard printed form. Upon request, almost any textbook or similar literature can be made available in a recorded edition from Recording For The Blind, Inc., 121 East 58th Street, New York, New York.

Woodworking Textbooks

Feirer, John L., *Industrial Arts Bench Woodworking,* Peoria, Illinois: Charles A. Bennett Co., Inc., 1959, 208pp.

Feirer, John L., *Industrial Arts Woodworking,* Peoria, Illinois: Charles A. Bennett Co., Inc., 1960. 320pp.

(Large Type and Braille editions available from)
American Printing House for the Blind
1839 Frankfort Avenue
Louisville 6, Kentucky

Hjorth, Herman and Ewell W. Fowler, *Basic Woodworking,* Milwaukee: Bruce Publishing Co., 1961, 224pp.

Hjorth, Herman and William F. Holtrop, *Operation of Modern Woodworking Machines,* Milwaukee: Bruce Publishing Co., 1958, 176pp.

Guides and Manuals

———, *Deltacraft Library Series,* Pittsburg: Deltacraft Publishing, 1955.

"Things To Make"
"One Evening Projects"
"Projects For Outdoor Living"
"Band Saw and Scroll Saw"
"Circular Saw and Jointer"
"Drill Press"
"Lathe"
"Abrasive Tools"
"Finishing Methods"

———, *Stanley Tool Guide,* New Britain, Conn.: Stanley Tool, 1952.

———, *Teaching Woodworking to Visually Handicapped Persons,* Vocational Rehabilitation Administration and University of Illinois, 1963, 89pp.

Special or Adapted Tools and Equipment Catalogs

Special Services, American Foundation for the Blind
15 West 16th Street
New York 11, New York

American Printing House for the Blind
1839 Frankfort Avenue
Louisville 6, Kentucky

British Royal National Institute for the Blind
224 Great Portland Street
London W. 1, England

HV1711 Hillebrand, Robert T.
W6 Woodworking techniques of
H556 a visually handicapped
craftsman.
c.5

DATE DUE

AMERICAN FOUNDATION FOR THE BLIND
15 WEST 16th STREET
NEW YORK, N.Y. 10011

DEMCO